YAMAHA

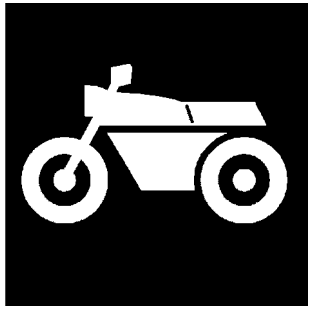

零件手冊

GQV155 (BLC2) TAIWAN

YAMAHA
GENUINE
Parts & Accessories

1YBLC-414CA

( )

序言

這本零件手冊適用於本手冊封面上的機種，當你要訂購零件時，請參考這本零件手冊，並正確的引用部品番號和部品名稱。

1. 在本零件手冊發行後，若有修改、增訂或價格調整時，將會發佈部品通報，關於部品通報，請您必須及時的依通報更正您手中的零件手冊，以保持準確度。

2. 縮寫
   下列是使用在本零件手冊內的縮寫代號
   “UR” 依需要使用尺寸(厚度)及/或數
   “UN” 依實際需要而訂
   “AP” 選擇部品
   “LM” 當地製造
   “F#” 車台號碼(適當機器號碼)
   “O/S” 加大尺寸

3. 組立零件數量
   - 以組立總成形態供銷之零件，在零件名稱前空一個字母之空間，在此空間印有一個 ”.” 字號來表示。
   - 組立總成構成零件數之指示，登載每一個構成零件右邊之用量欄內，是每一個獨立組立總成單位中之數量

部品番號	部品名稱	用量	備註
2F5–83310–60	前方向燈總成	2	
115–83311–60	.方向燈燈泡	1	

4. 圖案色彩列於備註欄，如下

部品番號	部品名稱	用量	備註
1P3-XF151-00-0X	前擋泥蓋	1	用於白/銀車
1P3-XF151-00-1X	前擋泥蓋	1	用於銀/黑車

5. 請注意本手冊圖面僅用於參考尋找部品番號，不用於組裝， 若需要組裝資訊，請使用服務手冊。

6. 項次番號前若有星號(*)代表已在第一版後作項目修訂。

7. 適用編號

車台編號

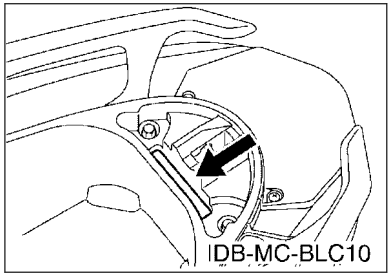

引擎編號

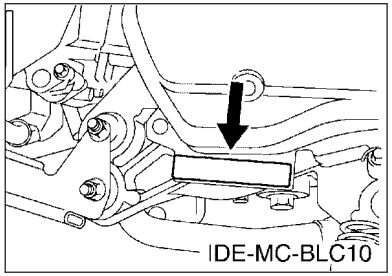

8. 顏色代碼 (記號(*)列出機種顏色)

簡稱	顏色（英文）	顏色	顏色番號
LGB	LOW GLOSS BLACK	平光黑	0098
MBL2	MAT BLACK 2	黑	0582
MDBNM2	MAT DARK BLUISH GRAY ME 2	深藍	1507
MVPBP1(*)	MAT VERY PALE BLUE PEARL 1	白	1890
YB	YAMAHA BLACK	山葉黑	0033

9. 適用起始打刻編號

車台編號

編號	用量欄	機種型式
RKRSG8910PA001001		BLC2

引擎編號

編號	用量欄	機種型式
G3T1E-001001		BLC2

機種資訊

10. 顏色資訊

機種型式	顏色型式代碼	顏色番號	顏色（英文）	顏色	簡稱
BLC2	A	1890	MAT VERY PALE BLUE PEARL 1	白	MVPBP1

目錄

引擎部品

汽缸.....1
曲軸,活塞.....2
汽門.....3
凸輪軸,鏈條.....4
水泵浦.....5
冷卻系統.....6
潤滑系統.....8
進氣系統.....9
排氣系統.....11
曲軸箱.....12
曲軸箱蓋 1.....14
離合器.....15
變速箱.....16

車體部品

車架.....17
擋泥蓋.....19
側蓋.....20
後臂,懸吊系統.....22
前叉.....23
汽油箱.....26
座墊.....28
前車輪.....30
前剎車卡鉗.....31
後車輪.....32
後剎車卡鉗.....33
轉向把手,鋼索.....34
前主缸.....35
支架,置腳踏.....37
腳防護擋板.....38
擋風鏡.....40
發電機.....41
方向燈 1.....42
儀錶.....43
頭燈.....44
尾燈.....45
把手開關,把手.....47
電裝 1.....48
電裝 3.....49
電裝 4.....50

索引

部品番號索引.....51

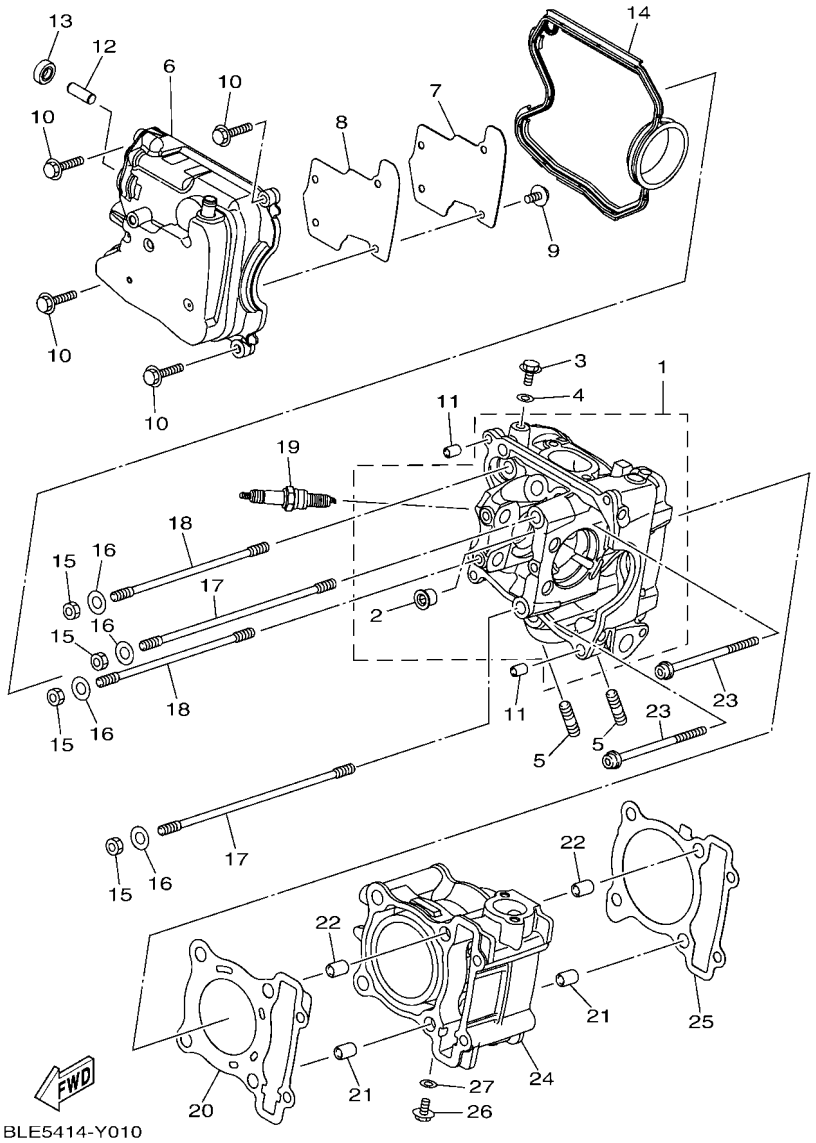

FIG. 1 汽缸

項次	部品番號	部品名稱	BLC2					備註
1	B8R–E1102–10	汽缸頭總成	1					
2	90340–12813	.螺栓	1					
3	95E32–06010	凸緣螺栓	1					
4	90430–06014	墊片	1					
5	90116–08806	雙頭螺栓	2					
6	B8R–E1191–00	汽缸頭外蓋1	1					
7	B8R–E1165–00	通氣板	1					
8	2DP–E1169–00	通氣蓋墊片	1					
9	90149–05801	螺絲	4					
10	95E32–06030	凸緣螺栓	4					
11	99530–08012	定位銷	2					
12	2DP–E132G–00	桿1	1					
13	93102–08800	油封	1					
14	B3F–E1193–00	汽缸頭墊片1	1					
15	90170–08811	六角螺帽	4					
16	90201–08859	平墊圈	4					
17	2DP–E1391–00	雙頭螺栓1	2					
18	2DP–E1392–00	雙頭螺栓2	2					
19	94700–00415	火星塞	1					
20	2DP–E1181–00	汽缸頭墊片1	1					
21	91810–14807	定位銷	2					
22	91810–14807	定位銷	2					
23	90110–06894	內六角螺栓	2					
24	B6H–Y1310–10	汽缸組	1					
25	B6H–E1351–00	汽缸墊片	1					
26	95E32–06010	凸緣螺栓	1					
27	90430–06014	墊片	1					

FIG. 2 曲軸,活塞

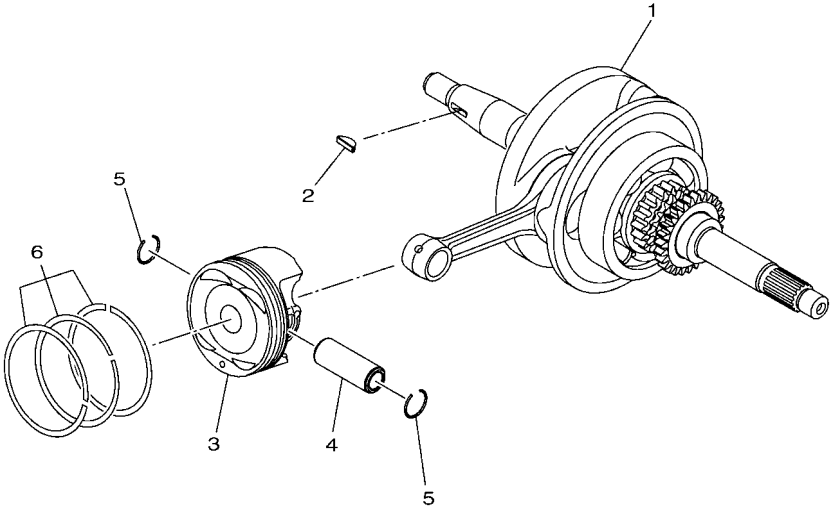

B8R1414-V020

項次	部品番號	部品名稱	BLC2					備註
1	BFV–E1400–00	曲軸總成	1					
2	90280–03017	半圓鍵	1					
3	BK6–E1631–00	活塞	1					
4	2DP–E1633–00	活塞銷	1					
5	93450–16115	夾環	2					
6	B63–E1603–00	活塞環組(STD)	1					

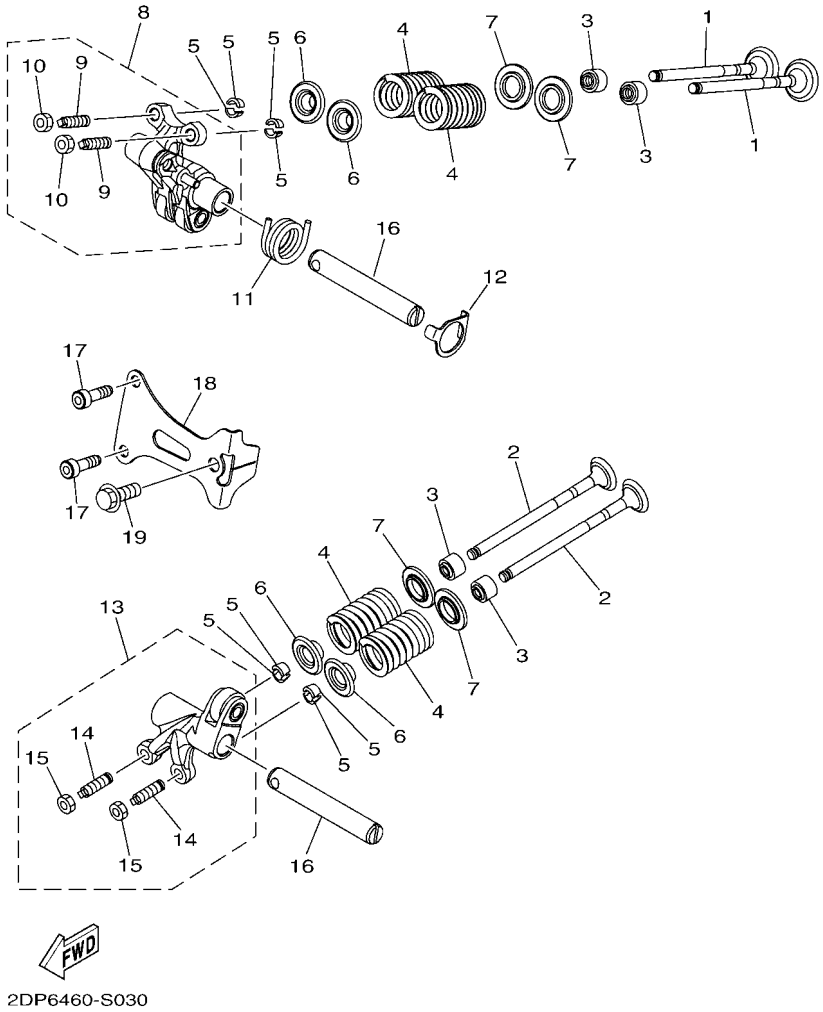

FIG. 3 汽門

項次	部品番號	部品名稱	BLC2					備註
1	B8R–E2111–00	進氣閥	2					
2	B8R–E2121–00	排氣閥	2					
3	54P–E2119–00	閥門封圈	4					
4	BB8–E2113–01	彈簧	4					
5	5TL–E2118–00	閥門銷	8					
6	2DP–E2117–00	閥門銷座	4					
7	52S–E2126–00	閥門彈簧座	4					
8	2DP–E2150–01	搖臂	1					
9	33S–E2159–01	.汽門調整螺絲	2					
10	90170–05803	.六角螺帽	2					
11	BB8–E2226–00	彈簧	1					
12	2DP–E2279–00	板	1					
13	B6H–E2160–01	搖臂2	1					
14	33S–E2159–01	.汽門調整螺絲	2					
15	90170–05803	.六角螺帽	2					
16	B65–E2156–00	搖臂軸2	2					
17	91312–05016	內六角螺栓	2					
18	2DP–E111F–00	板	1					
19	95E32–06014	凸緣螺栓	1					

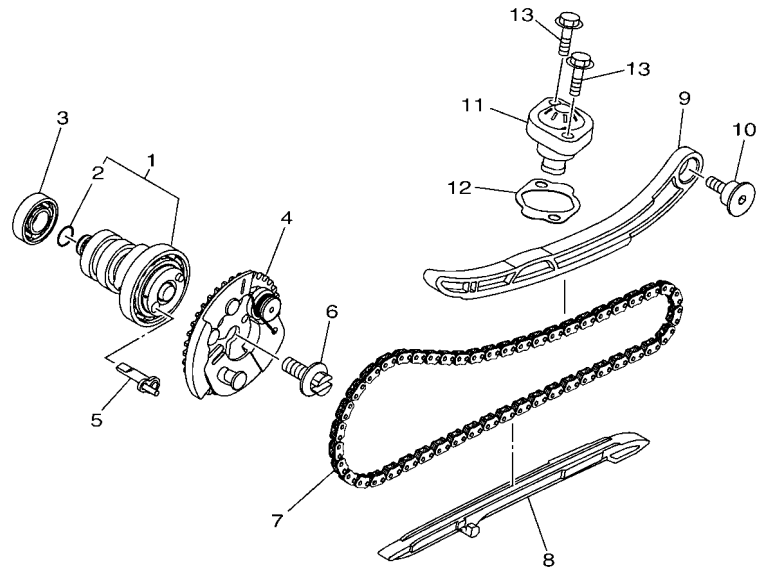

B6H1460-U040

FIG. 4 凸輪軸,鏈條

項次	部品番號	部品名稱	BLC2					備註
1	BFV–E2170–00	凸輪軸總成	1					
2	93210–09806	護油圈	1					
3	93306–001YM	軸承	1					
4	BBP–E2280–10	減壓器	1					
5	B6H–E2288–01	減壓器	1					
6	5YP–E2157–01	螺栓	1					
7	94568–A8096	鏈條	1					
8	B6H–E2231–00	停止器導件	1					
9	B6H–E2241–00	停止器導件2	1					
10	1DB–E2228–00	螺栓	1					
11	2PV–E2210–01	鏈條張力器總成	1					
12	B6H–E2213–00	張力器墊片	1					
13	95E32–06020	凸緣螺栓	2					

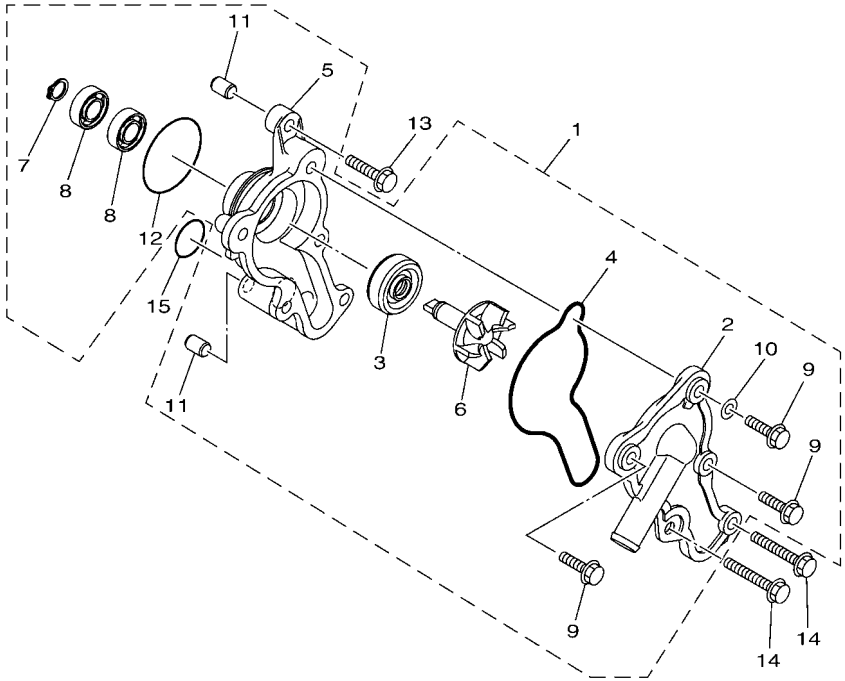

B8R1414-V050

FIG. 5 水泵浦

項次	部品番號	部品名稱	BLC2					備註
1	B6H–WE242–01	冷卻泵浦組(含冷卻液)	1					
2	B6H–E2422–00	.水泵浦蓋	1					AP
3	B6H–E2223–00	.封圈	1					
4	B6H–E2439–00	.護油圈	1					
5	B6H–E1185–00	.汽缸頭側蓋	1					
6	B6H–E2450–00	.推進器	1					
7	99009–08400	.夾環	1					
8	93300–608X0	.軸承	2					
9	95027–06020	.凸緣螺栓	3					
10	90430–06803	.墊片	1					
11	99530–08012	.定位銷	2					
12	93210–39803	.護油圈	1					
13	95E32–06025	凸緣螺栓	1					
14	95E32–06045	凸緣螺栓	2					
15	93210–19809	護油圈	1					

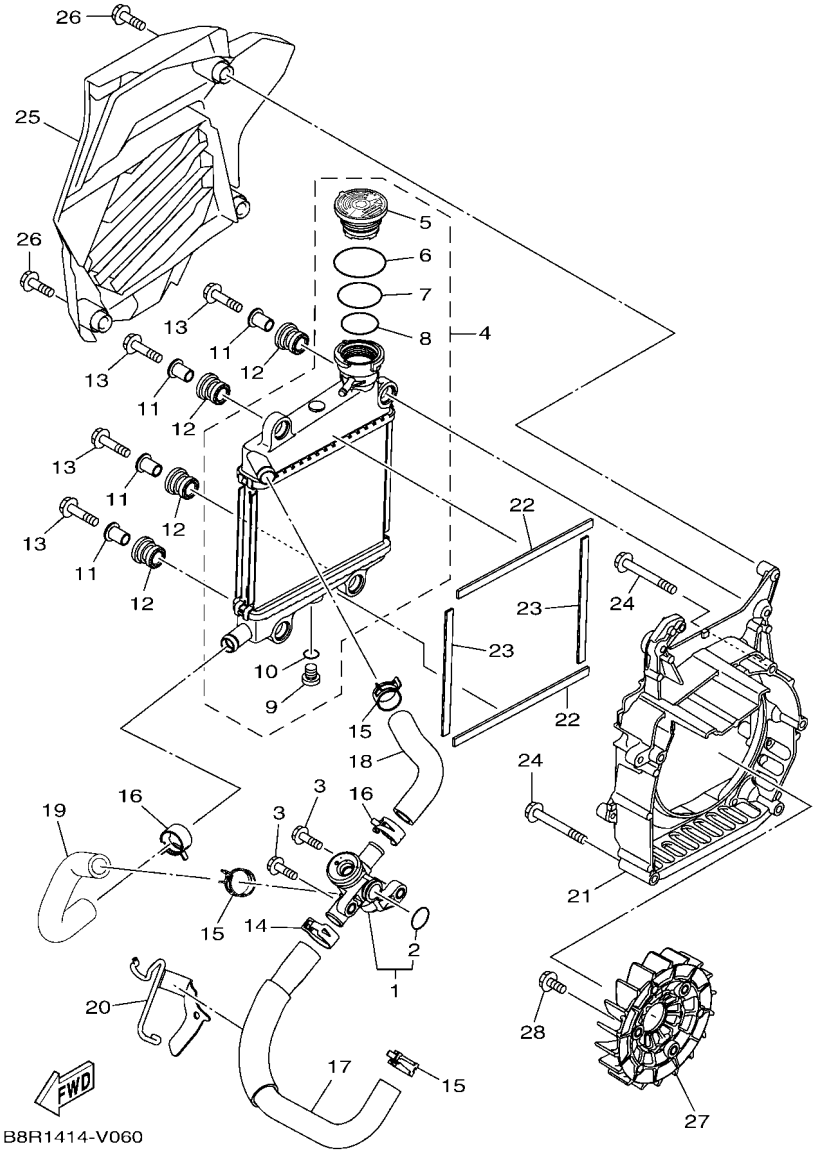

FIG. 6 冷卻系統

項次	部品番號	部品名稱	BLC2					備註
1	B3F–E2410–01	節溫器總成	1					
2	B3F–E2439–00	.護油圈	1					
3	95E32–06020	凸緣螺栓	2					
4	B6H–E240A–01	水箱總成	1					
5	B65–E2462–02	.水箱蓋	1					
6	B63–E22A2–00	.O型環	1					
7	B63–E2439–00	.護油圈	1					
8	B63–E2843–00	.護油圈	1					
9	5ST–E2615–00	.排放螺栓	1					
10	5ST–E2843–00	.護油圈	1					
11	90387–08823	軸環	4					
12	90480–14833	橡膠襯套	4					
13	95D32–06030	凸緣螺栓	4					
14	90467–20806	止夾	1					
15	90467–19803	止夾	3					
16	90467–19803	止夾	2					
17	B8R–E2481–00	管 1	1					
18	B8R–E2482–00	管 2	1					
19	B8R–E2483–00	管 3	1					
20	B8R–E2491–00	固定夾1	1					
21	B8R–E2621–00	風扇外蓋	1					
22	90520–10853	防震墊	2					
23	90520–10855	防震墊	2					
24	95E32–06050	凸緣螺栓	5					
25	B8R–E2467–00	水箱外蓋	1					
26	95E32–06020	凸緣螺栓	3					
27	B8R–E2611–00	風扇	1					

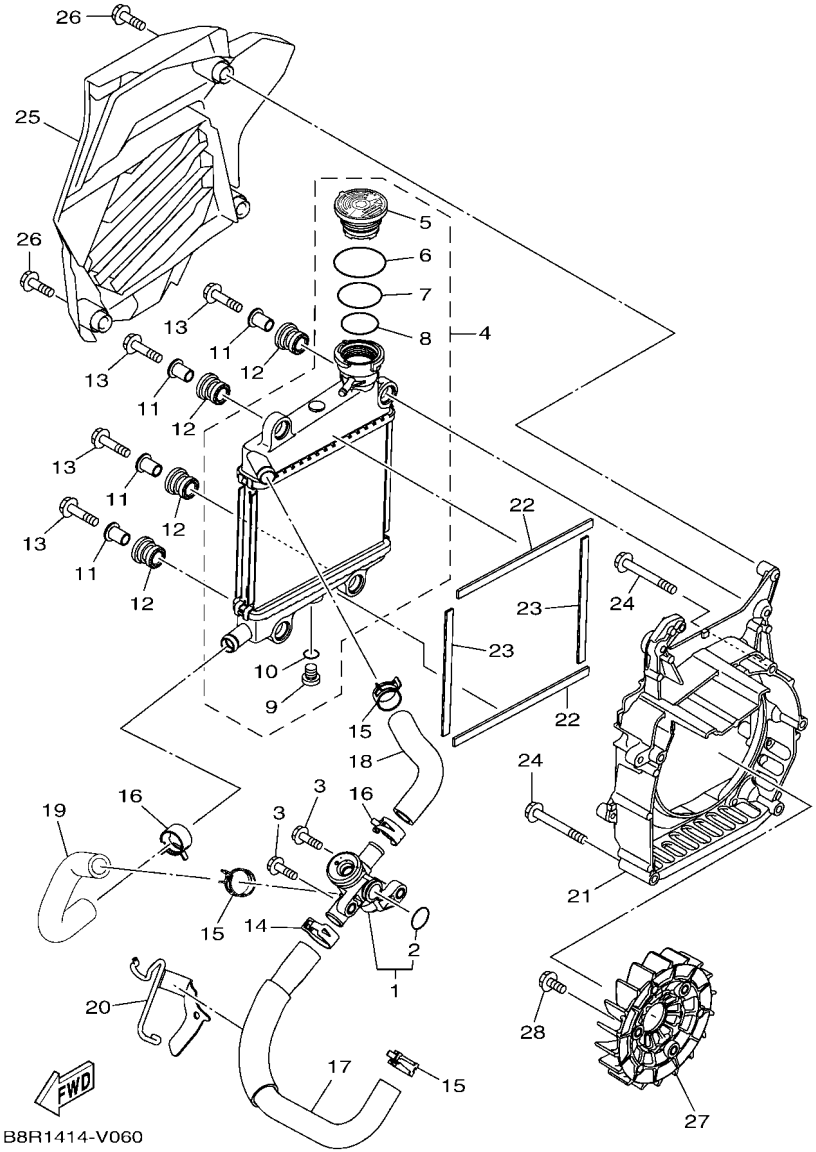

FIG. 6 冷卻系統

項次	部品番號	部品名稱	BLC2					備註
28	95D32–06016	凸緣螺栓	3					

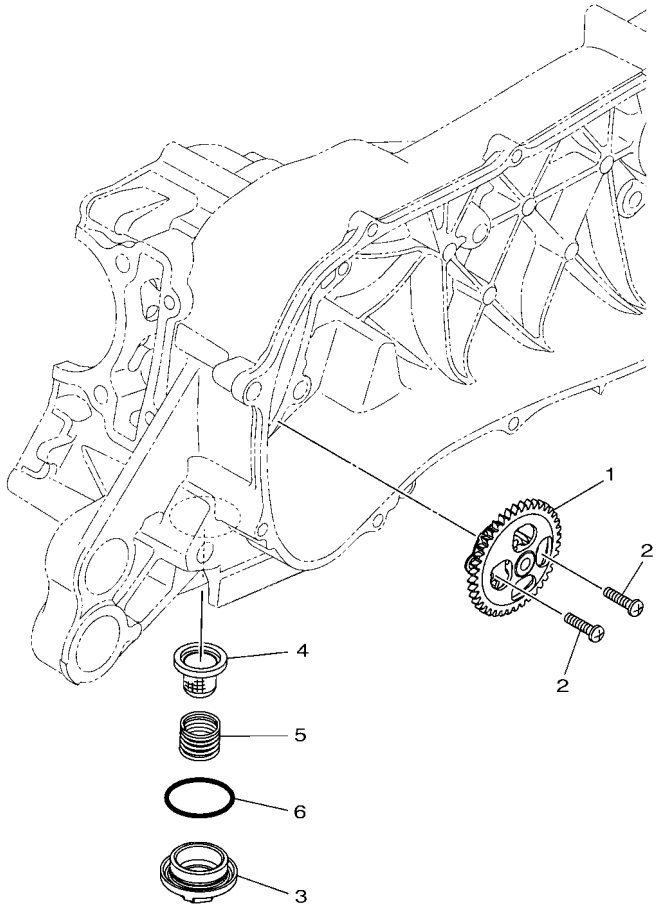

B6H1460-U070

FIG. 7 潤滑系統

項次	部品番號	部品名稱	BLC2					備註
1	B6H–E3300–01	機油泵浦總成	1					
2	98502–05020	平頭螺絲	2					
3	54P–E5351–01	排油螺栓	1					
4	54P–E3411–00	機油濾網	1					
5	90501–16004	壓力彈簧	1					
6	93210–29800	護油圈	1					

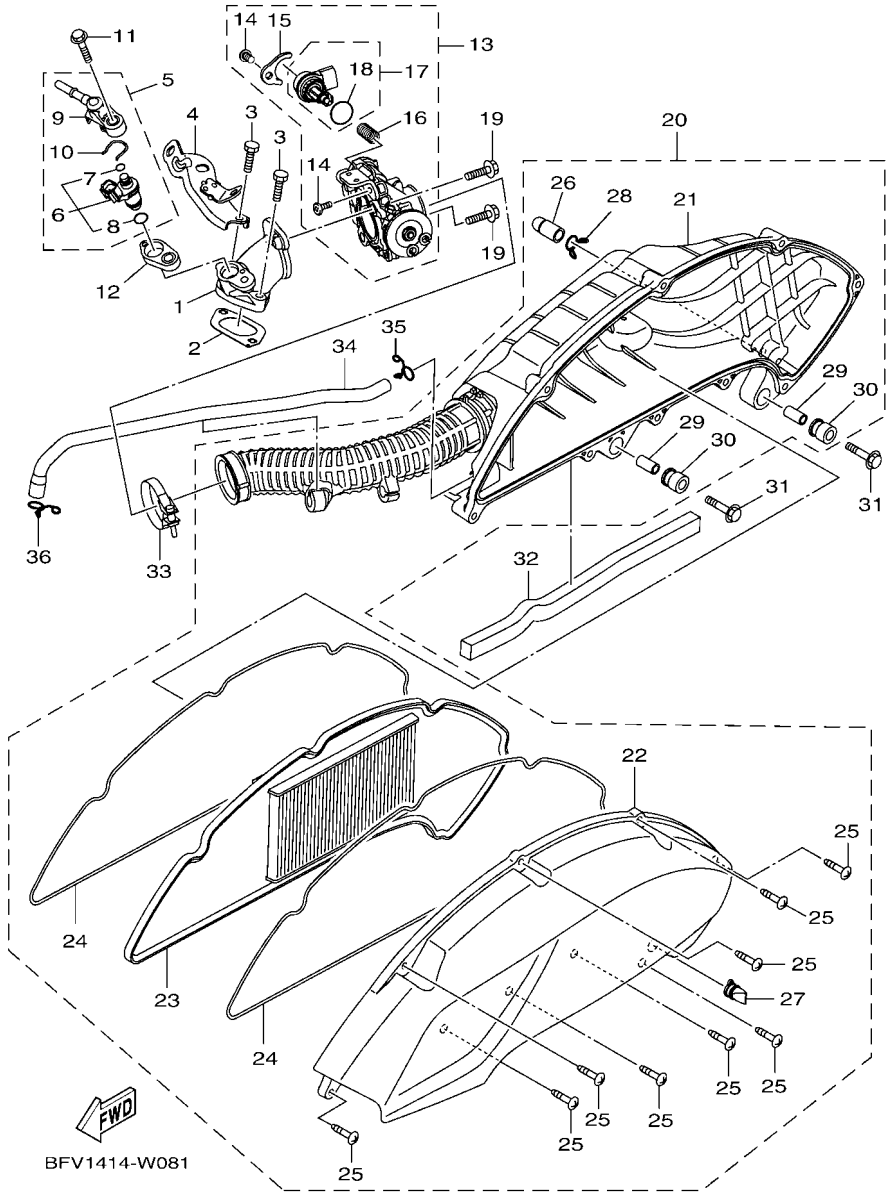

FIG. 8 進氣系統

項次	部品番號	部品名稱	BLC2					備註
1	B6H–E3585–00	歧管	1					
2	B6H–E4199–00	墊片	1					
3	91332–06025	內六角螺栓	2					
4	B8R–E4146–00	板	1					
5	2PV–E3770–00	噴射器總成	1					
6	2PV–E3761–00	.噴射器	1					
7	54P–E4147–00	..O型環	1					
8	5CA–E4147–00	..O型環	1					
9	54P–E3938–00	.管	1					
10	54P–E4137–00	.止夾	1					
11	95D32–06030	凸緣螺栓	1					
12	2DP–E3556–00	墊片	1					
13	B65–E3750–11	節流本體	1					
14	98502–06012	.平頭螺絲	2					
15	54P–E4243–00	.板	1					
16	54P–E4335–00	.柱塞彈簧	1					
17	B63–H5801–01	.馬達	1					
18	54P–E416A–00	..護油圈	1					
19	90110–06846	內六角螺栓	2					
20	BFV–E4410–00	空氣濾清器總成	1					
21	BFV–WE441–00	.空氣濾清器箱組1	1					
22	BFV–WE442–00	.空氣濾清器箱組2	1					
23	BFV–E4451–00	.空氣濾清網	1					
24	BFV–E4452–00	.封圈	2					
25	97707–50025	.自攻螺絲	9					
26	BFV–E443E–00	.溢氣管	1					
27	BFV–E443G–00	.溢氣管2	1					

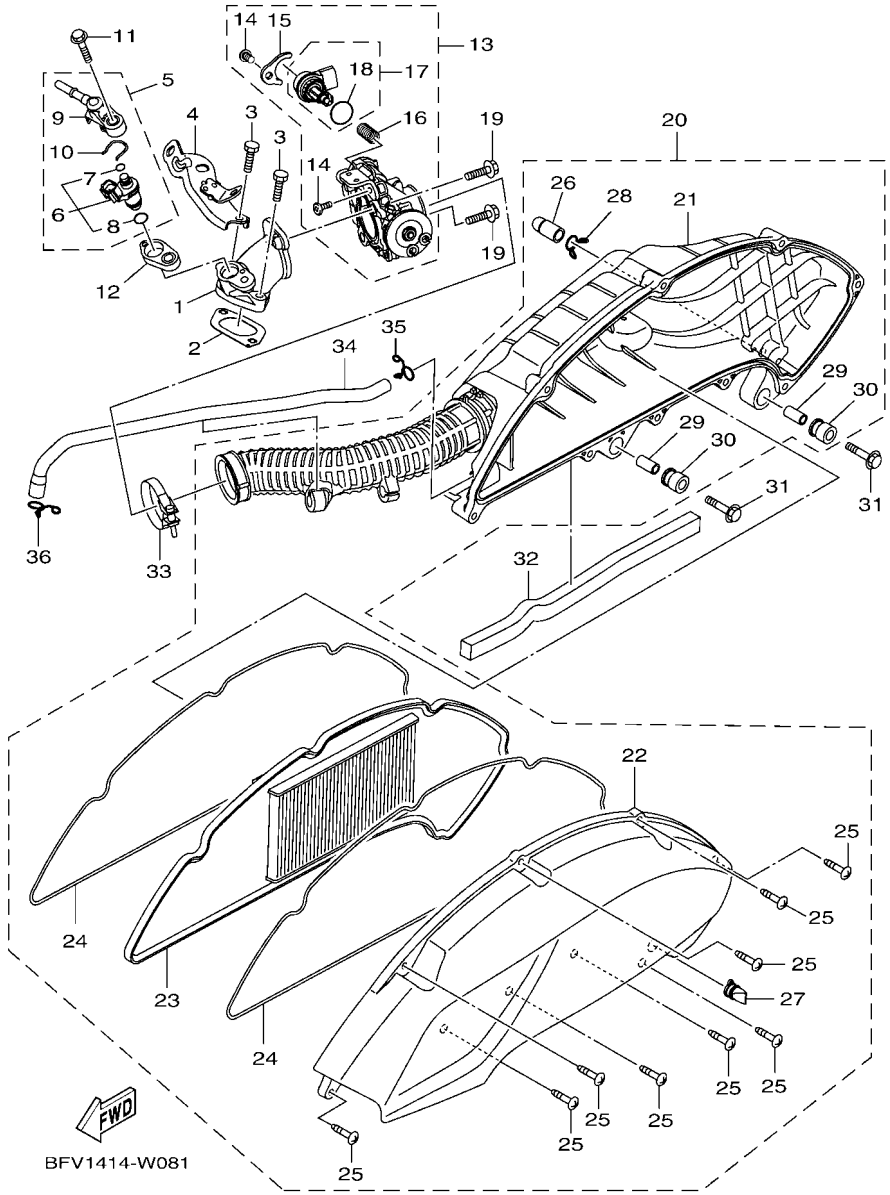

FIG. 8 進氣系統

項次	部品番號	部品名稱	BLC2					備註
28	90467–12806	.止夾	1					
29	5TY–E4449–00	.軸環	2					
30	BFV–E4435–00	.索環	2					
31	95D32–06030	凸緣螺栓	2					
32	90520–15816	防震墊	1					
33	90450–43805	束環	1					
34	B8R–E1166–00	通氣導管	1					
35	90467–11825	止夾	1					
36	90467–12052	止夾	1					

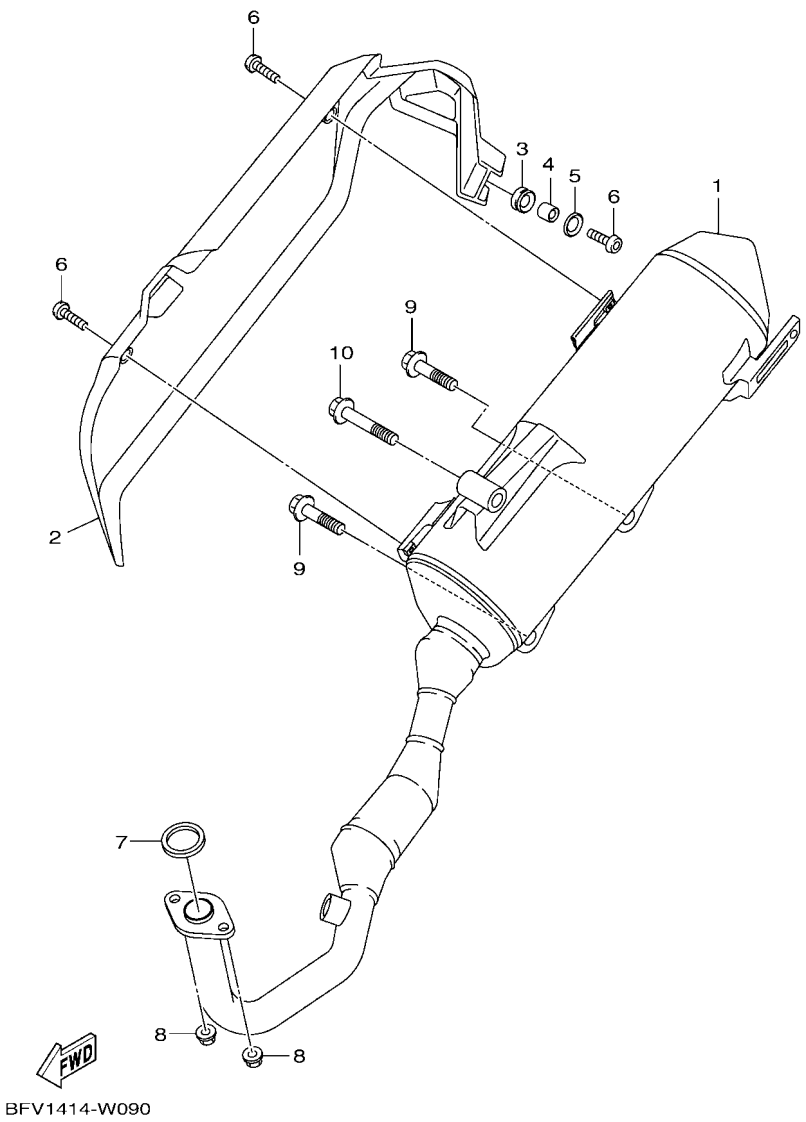

FIG. 9 排氣系統

項次	部品番號	部品名稱	BLC2					備註
1	BFV–E4711–10	排氣管	1					
2	BFV–E4718–00	排氣管護罩	1					
3	90480–12809	橡膠襯套	1					
4	90387–06870	軸環	1					
5	90201–06057	平墊圈	1					
6	90111–06801	內六角圓頭螺栓	3					
7	B63–E4613–00	排氣管墊片 1	1					
8	95702–08500	凸緣螺帽	2					
9	95D32–10045	凸緣螺栓	2					
10	95D32–10060	凸緣螺栓	1					

FIG. 10 曲軸箱

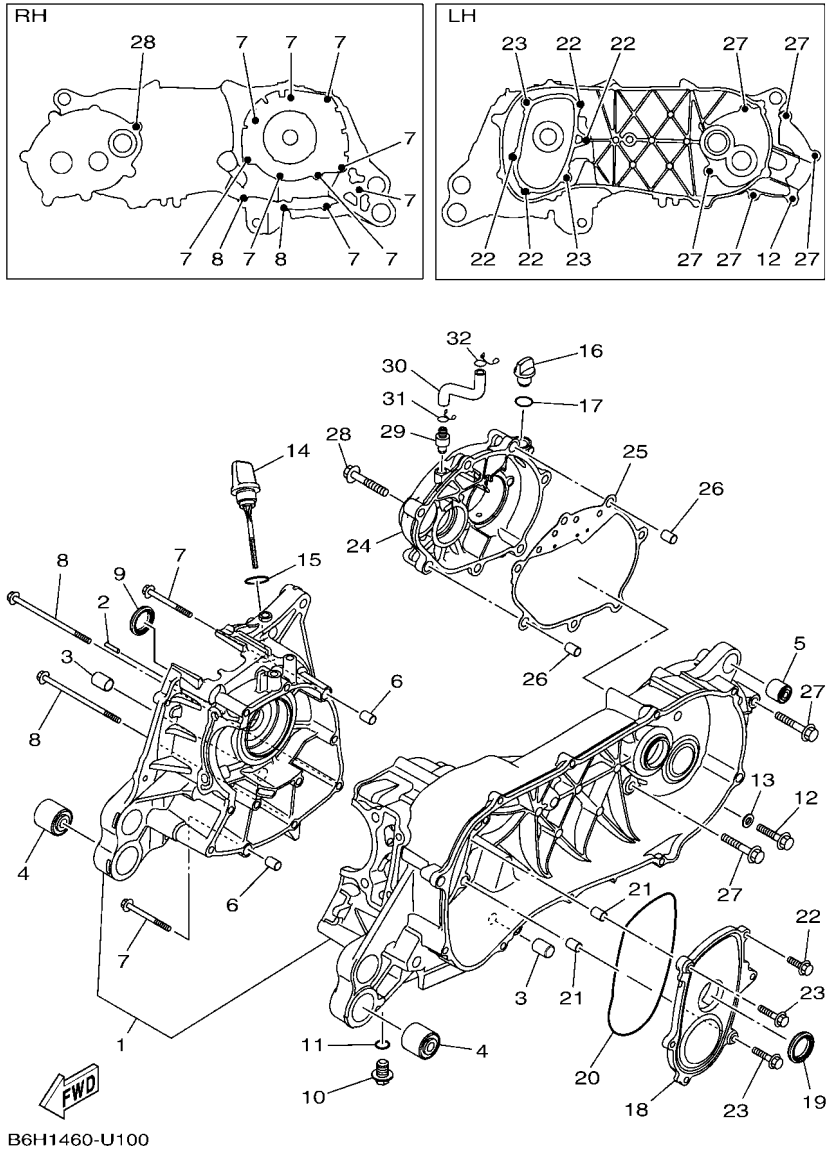

項次	部品番號	部品名稱	BLC2					備註
1	B8R–E5150–01	曲軸箱總成	1					
2	99480–03012	銷	1					
3	1SH–F7121–00	襯套	2					
4	90388–10808	減震器	2					
5	4X6–F2216–00	後緩衝器襯套	1					
6	91810–14807	定位銷	2					
7	95E32–06060	凸緣螺栓	9					
8	95E32–06110	凸緣螺栓	2					
9	93102–22829	油封	1					
10	90340–12816	螺栓	1					
11	90430–12803	墊片	1					
12	95D32–08045	凸緣螺栓	1					
13	90430–08804	墊片	1					
14	B8R–E5362–00	機油量油尺	1					
15	5LW–E3769–00	護油圈	1					
16	B8R–E5363–00	齒輪油加油蓋	1					
17	93210–14816	護油圈	1					
18	B8R–E5423–01	蓋2	1					
19	93102–24802	油封	1					
20	93211–28800	護油圈	1					
21	91810–14807	定位銷	2					
22	95E32–06020	凸緣螺栓	4					
23	95E32–06030	凸緣螺栓	2					
24	B8R–E5421–01	曲軸箱蓋2	1					
25	B6H–E5461–10	曲軸箱蓋墊片2	1					
26	91810–14807	定位銷	2					
27	95E32–08045	凸緣螺栓	5					

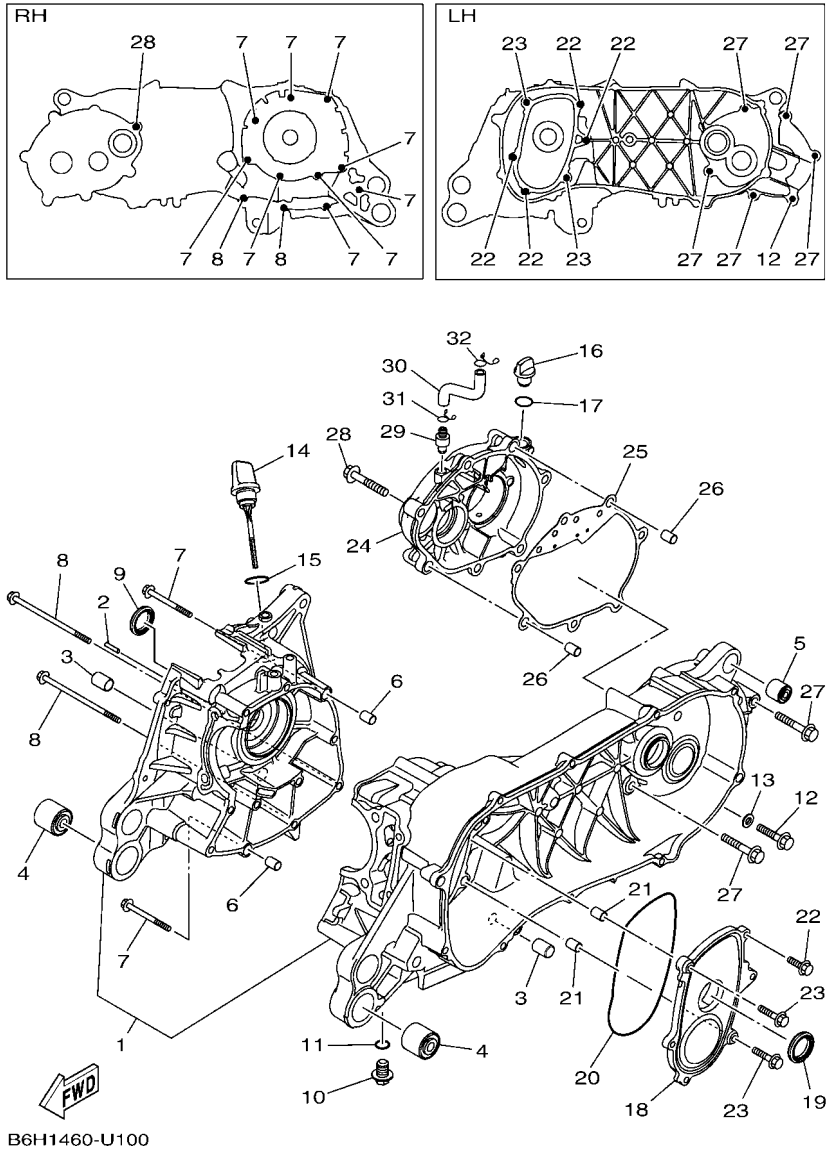

FIG. 10 曲軸箱

項次	部品番號	部品名稱	BLC2					備註
28	95E32–08035	凸緣螺栓	1					
29	B6H–E5371–00	溢氣管	1					
30	B6H–E5373–00	通氣管	1					
31	90467–10008	止夾	1					
32	90467–11825	止夾	1					

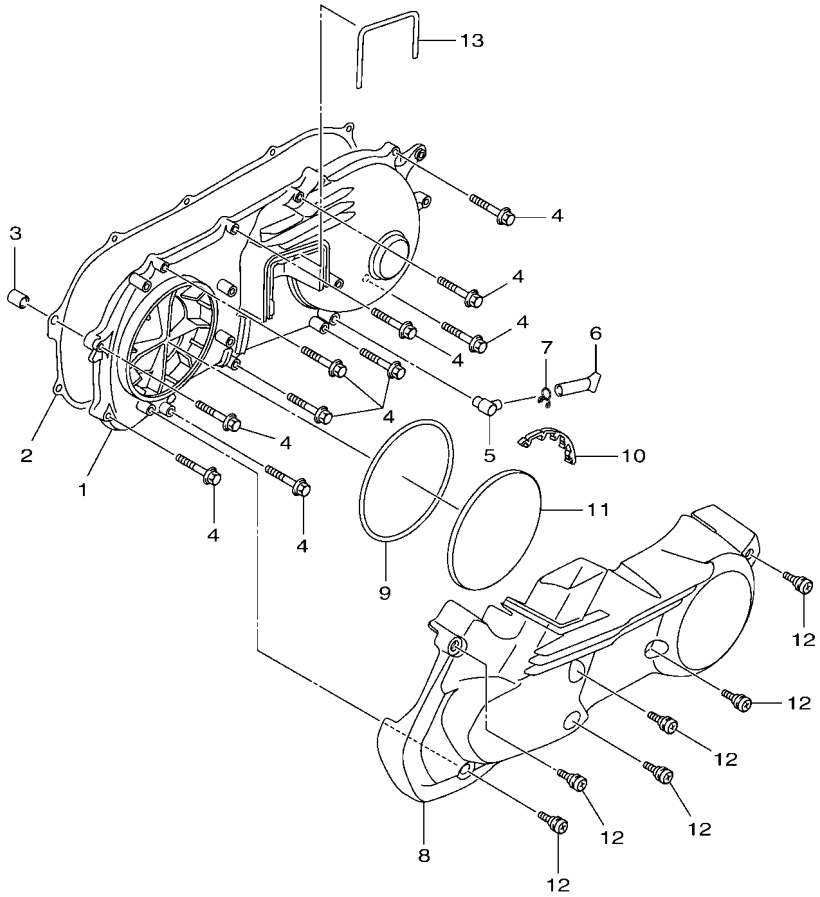

FIG. 11 曲軸箱蓋 1

項次	部品番號	部品名稱	BLC2					備註
1	B8R–E5411–00	曲軸箱蓋1	1					
2	B6H–E5451–00	曲軸箱蓋墊片1	1					
3	91810–14807	定位銷	1					
4	95E32–06035	凸緣螺栓	10					
5	5LW–E5371–01	溢氣管	1					
6	BCV–E443E–00	溢氣管	1					
7	90467–11106	止夾	1					
8	B8R–XE543–00	曲軸箱蓋組	1					
9	B65–E5472–00	封圈	1					
10	BBJ–E5495–00	橡膠封圈	1					
11	2DP–E5407–00	濾清網1	1					
12	B63–E5481–00	螺栓1	6					
13	2DP–E5474–00	封圈	1					

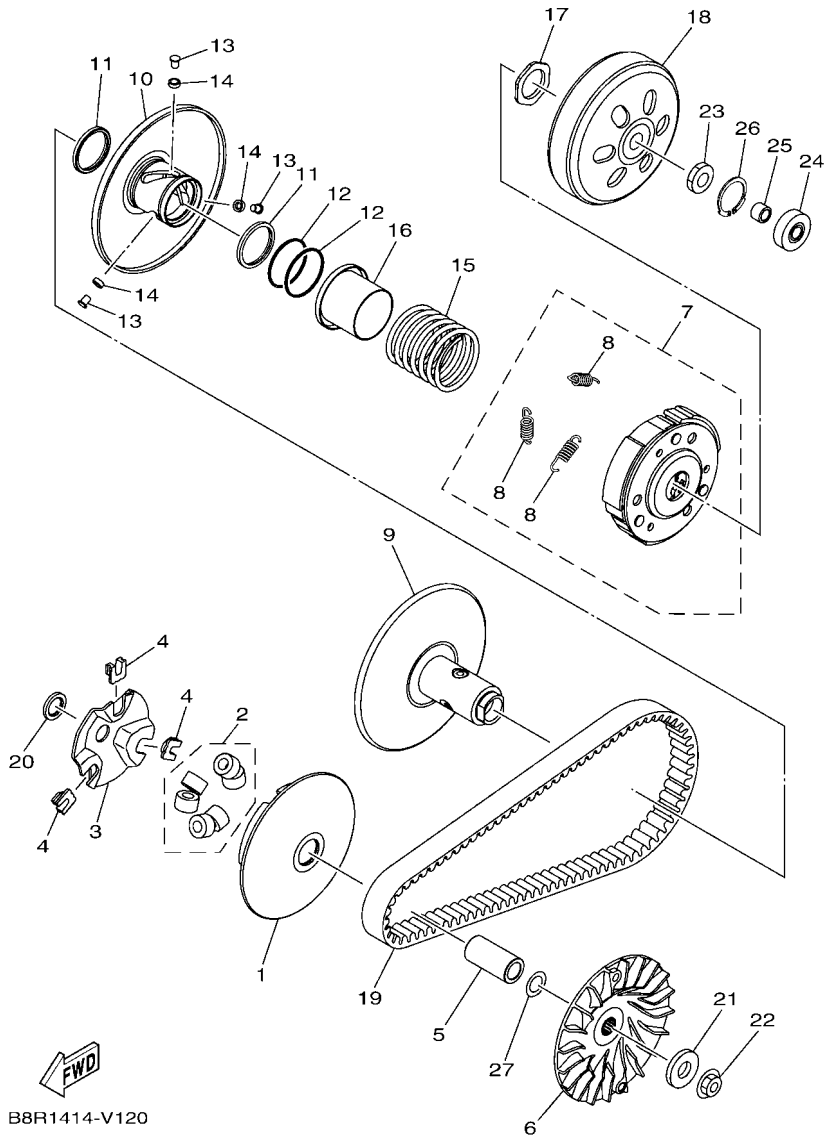

FIG. 12 離合器

項次	部品番號	部品名稱	BLC2					備註
1	B8R–E7620–00	主滑動槽輪	1					
2	BFV–WE763–00	滾珠組	1					
3	B8R–E7623–00	凸輪	1					
4	B8R–E7653–00	滑件	3					
5	B8R–E7674–00	軸環	1					
6	B8R–E7611–00	主固定槽輪	1					
7	BFV–E6620–00	離合器牽轉具總成	1					
8	BFV–E6626–00	.離合器回位彈簧	3					
9	B8R–WE766–00	副固定槽輪	1					
10	B8R–E7670–00	副滑動槽輪	1					
11	B8R–E7465–00	封圈	2					
12	B8R–E7465–10	封圈	2					
13	B8R–E7664–00	導銷	3					
14	B8R–E7674–10	軸環	3					
15	B8R–E7683–00	彈簧	1					
16	B8R–E7684–00	副彈簧座	1					
17	1DK–E7668–00	螺帽	1					
18	B8R–E6611–00	離合器殼整體	1					
19	B8R–E7641–00	皮帶	1					
20	90201–16819	平墊圈	1					
21	90201–15849	平墊圈	1					
22	90179–12004	螺帽	1					
23	90170–12803	六角螺帽	1					
24	933A6–202Y8	軸承	1					
25	90380–10800	實心襯套	1					
26	99009–35700	夾環	1					
27	90201–15845	平墊圈	1					

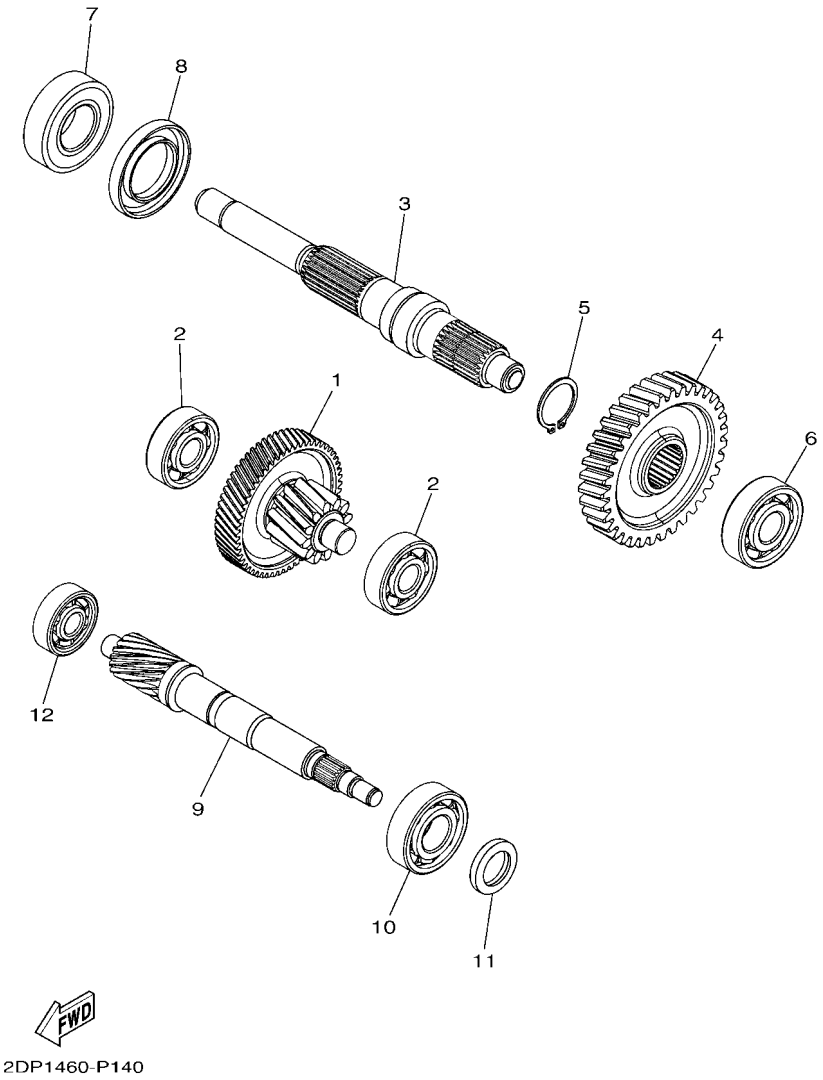

FIG. 13 變速箱

項次	部品番號	部品名稱	BLC2					備註
1	B8R–E7410–00	主軸總成	1					
2	93306–302YW	軸承	2					
3	B8R–E7421–00	驅動軸	1					
4	B8R–E7211–00	第一從動齒輪	1					
5	99009–25400	夾環	1					
6	93306–303XC	軸承	1					
7	93306–255YA	軸承	1					
8	93102–32807	油封	1					
9	B8R–E6111–00	主驅動齒輪	1					
10	93306–254Y9	軸承	1					
11	93102–20815	油封	1					
12	93306–351Y8	軸承	1					

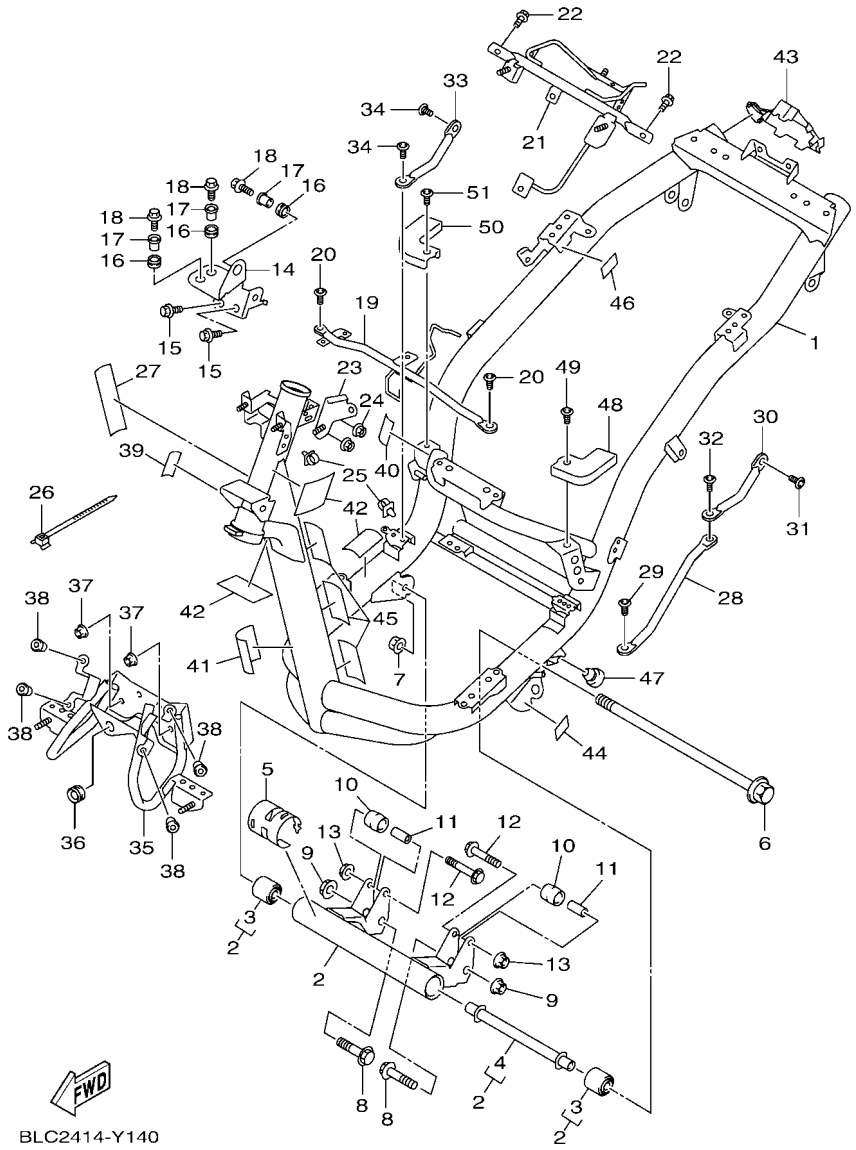

FIG. 14 車架

項次	部品番號	部品名稱	BLC2					備註
1	BLC–F1110–00–33	車架整體	1					山葉黑
2	B8R–XF141–00	引擎支架整體	1					
3	90388–10818	.減震器	2					
4	90387–10855	.軸環	1					
5	B8R–F117G–00	防震墊	1					
6	B8R–F2141–00	輪軸	1					
7	95602–10200	自鎖螺帽	1					
8	90105–10283	凸緣螺栓	2					
9	95602–10200	自鎖螺帽	2					
10	5P1–F7114–00	停止器	2					
11	90387–08821	軸環	2					
12	90105–088E3	凸緣螺栓	2					
13	95602–08200	U型螺帽	2					
14	B8R–F8356–00	固定座1	1					
15	95D37–08014	凸緣螺栓	2					
16	90480–14229	橡膠襯套	3					
17	90387–068N8	軸環	3					
18	95D37–06020	凸緣螺栓	3					
19	B8R–F116M–00	支架 10	1					
20	95D02–06014	凸緣螺栓	2					
21	BFV–F8358–00	固定座3	1					
22	95D02–06012	凸緣螺栓	2					
23	B8R–F1415–00	支架	1					
24	95702–06500	凸緣螺帽	2					
25	90464–16803	固定夾	2					
26	90464–22810	固定夾	1					
27	1P3–F4747–01	保護片	1					

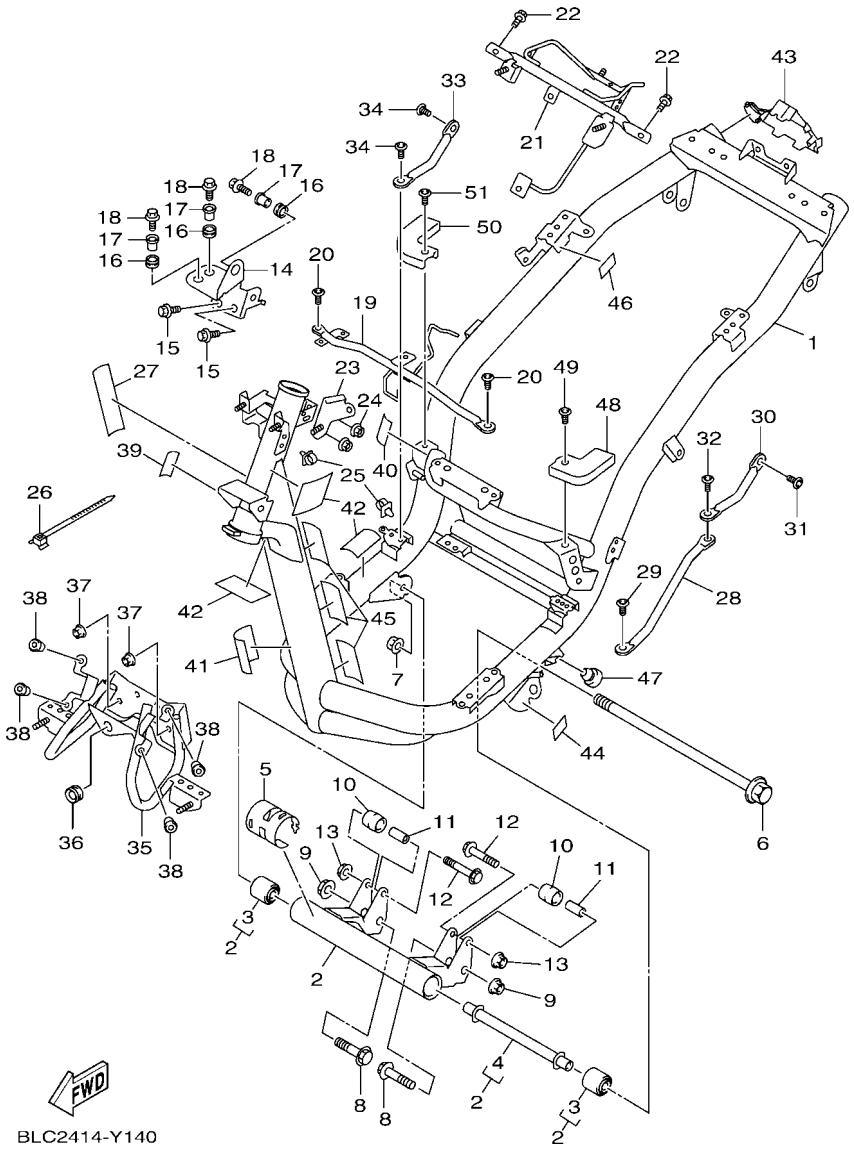

FIG. 14 車架

項次	部品番號	部品名稱	BLC2					備註
28	B8R–F116M–10	支架 10	1					
29	92012–08014	內六角圓頭螺栓	1					
30	B8R–F116M–20	支架 10	1					
31	92012–08014	內六角圓頭螺栓	1					
32	92012–08020	內六角圓頭螺栓	1					
33	B8R–F116M–30	支架 10	1					
34	92012–08014	內六角圓頭螺栓	2					
35	BLC–F8357–00	固定座2	1					
36	90480–17802	橡膠襯套	1					
37	90179–06833	螺帽	2					
38	90179–05003	螺帽	4					
39	5ML–F1639–00	防震墊	1					
40	90520–02821	防震墊	1					
41	BFV–F113B–00	防震墊	1					
42	90520–02834	防震墊	3					
43	BFV–F1652–00	保護片	1					
44	4C6–F4723–00	防震墊	1					
45	5ML–F117G–00	防震墊	3					
46	5ML–F836U–00	防震墊	1					
47	BFV–F7114–00	停止器	1					
48	BFV–F7452–00	置腳架支架1	1					
49	92012–08014	內六角圓頭螺栓	1					
50	BFV–F7462–00	置腳架支架2	1					
51	92012–08014	內六角圓頭螺栓	1					

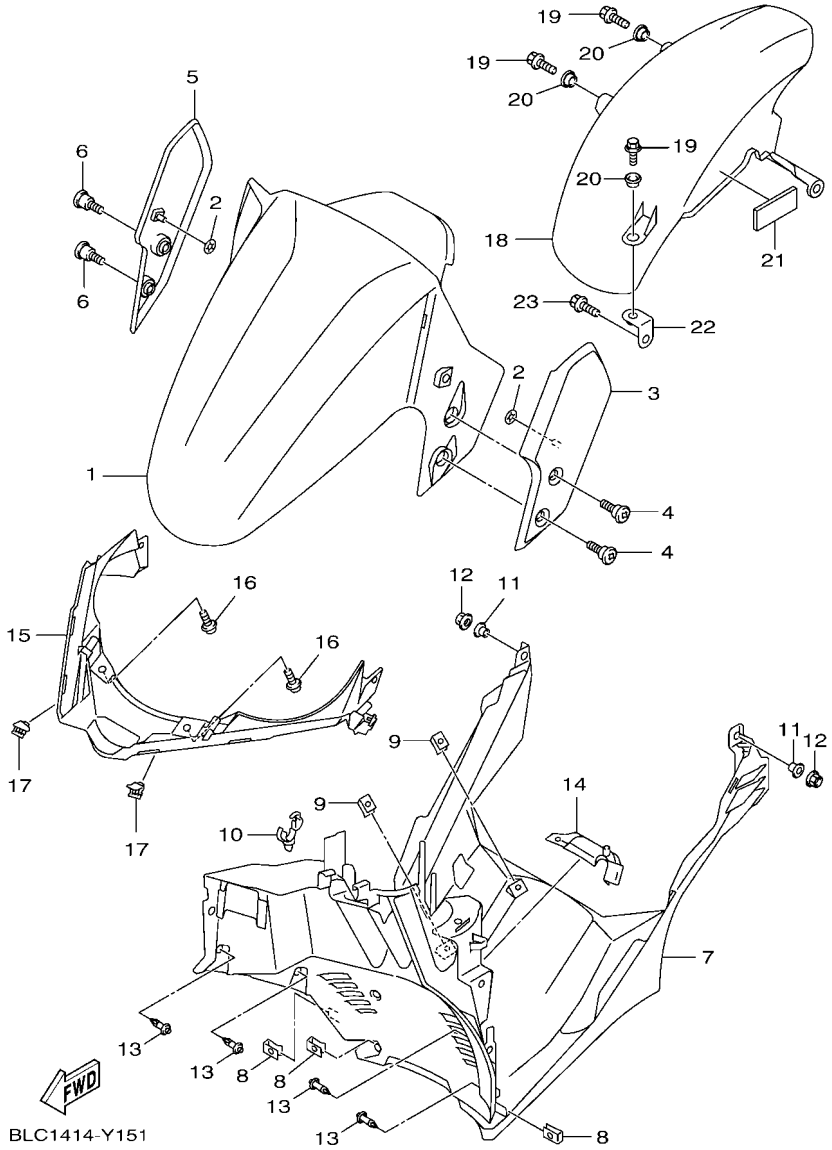

FIG. 15 擋泥蓋

項次	部品番號	部品名稱	BLC2					備註
1	BFV–F1511–00	前擋泥蓋	1					
2	90183–05801	螺絲夾片	2					
3	BFV–F1513–00–P4	前擋泥蓋固定座	1					用於白
4	90109–068D3	螺栓	2					
5	BFV–F1514–00–P4	前擋泥蓋固定座2	1					用於白
6	90109–068D3	螺栓	2					
7	BFV–F1552–00	下前擋泥蓋	1					
8	90183–05827	螺絲夾片	3					
9	90183–05803	螺絲夾片	2					
10	90464–10800	固定夾	1					
11	90387–06868	軸環	2					
12	95702–06500	凸緣螺帽	2					
13	90269–06803	塑膠螺絲	4					
14	BFV–F1521–00	前擋泥蓋襟翼	1					
15	BLC–F1553–00	下前擋泥蓋2	1					
16	90111–06884	內六角圓頭螺栓	2					
17	BLC–F151B–00	蓋	1					
18	BFV–F1611–01	後擋泥蓋	1					
19	95D07–06016	螺栓	3					
20	90387–06868	軸環	3					
21	5ML–F117G–00	防震墊	1					
22	BFV–F1613–00	擋泥板固定座 1	1					
23	95D07–06016	螺栓	1					

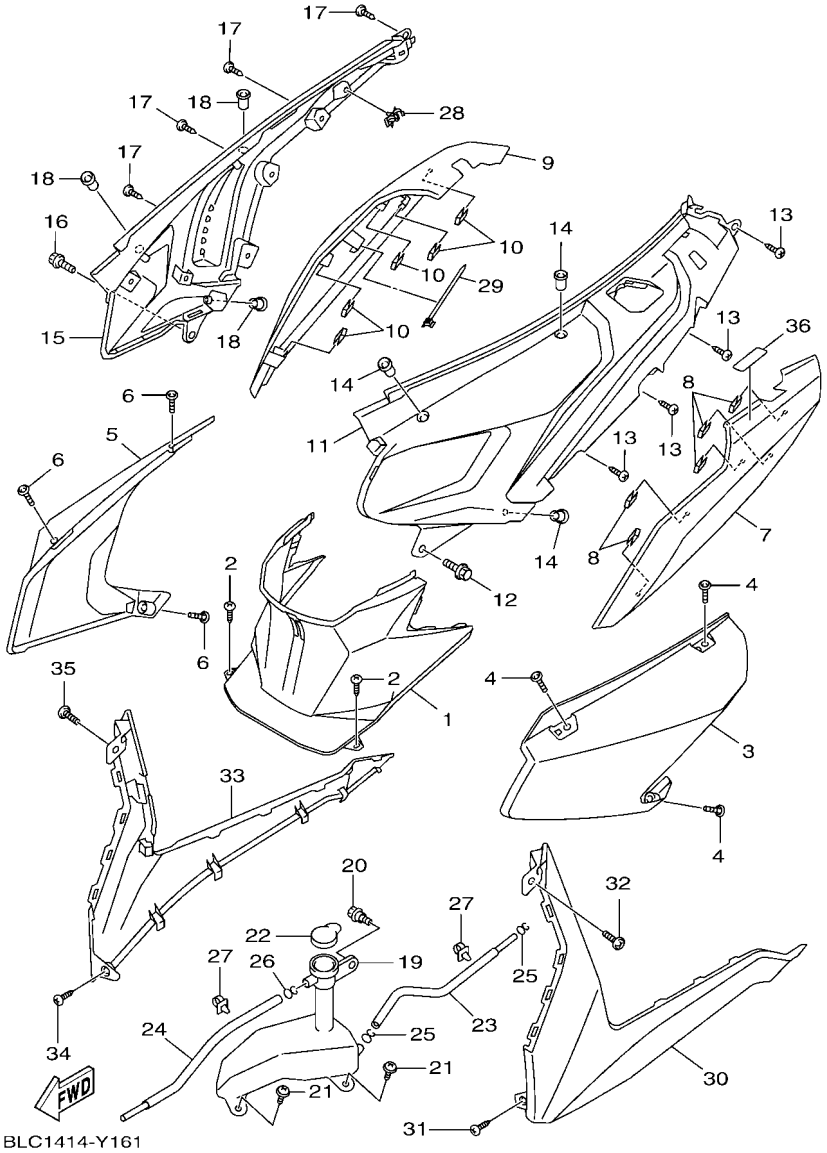

FIG. 16 側蓋

項次	部品番號	部品名稱	BLC2					備註
1	BFV–F1711–00	側蓋1(中央蓋)	1					
2	97707–50016	自攻螺絲	2					
3	BLC–F1721–10	側蓋2(左後側蓋)	1					
4	92017–05016	圓頭螺栓	3					
5	BLC–F1731–10	側蓋3(右後側蓋)	1					
6	92017–05016	圓頭螺栓	3					
7	BFV–F1741–00–P3	側蓋4(尾燈上蓋)	1					用於白
8	90183–05827	螺絲夾片	5					
9	BFV–F171E–00–P3	側蓋5	1					用於白
10	90183–05827	螺絲夾片	5					
11	BLC–F172A–00	嵌板1	1					
12	90119–06821	螺栓	1					
13	97707–50012	自攻螺絲	4					
14	90179–05849	螺帽	3					
15	BLC–F172F–00	嵌板2	1					
16	90119–06821	螺栓	1					
17	97707–50012	自攻螺絲	4					
18	90179–05849	螺帽	3					
19	B8R–F1871–00	副水箱	1					
20	90109–06086	螺栓	1					
21	90159–05806	螺絲附墊圈	2					
22	5CA–F1815–00	副水箱蓋	1					
23	B8R–F247A–00	管 1	1					
24	B8R–F247B–00	管 2	1					
25	90467–090A2	止夾	2					
26	90467–08003	止夾	1					
27	90464–10800	固定夾	2					

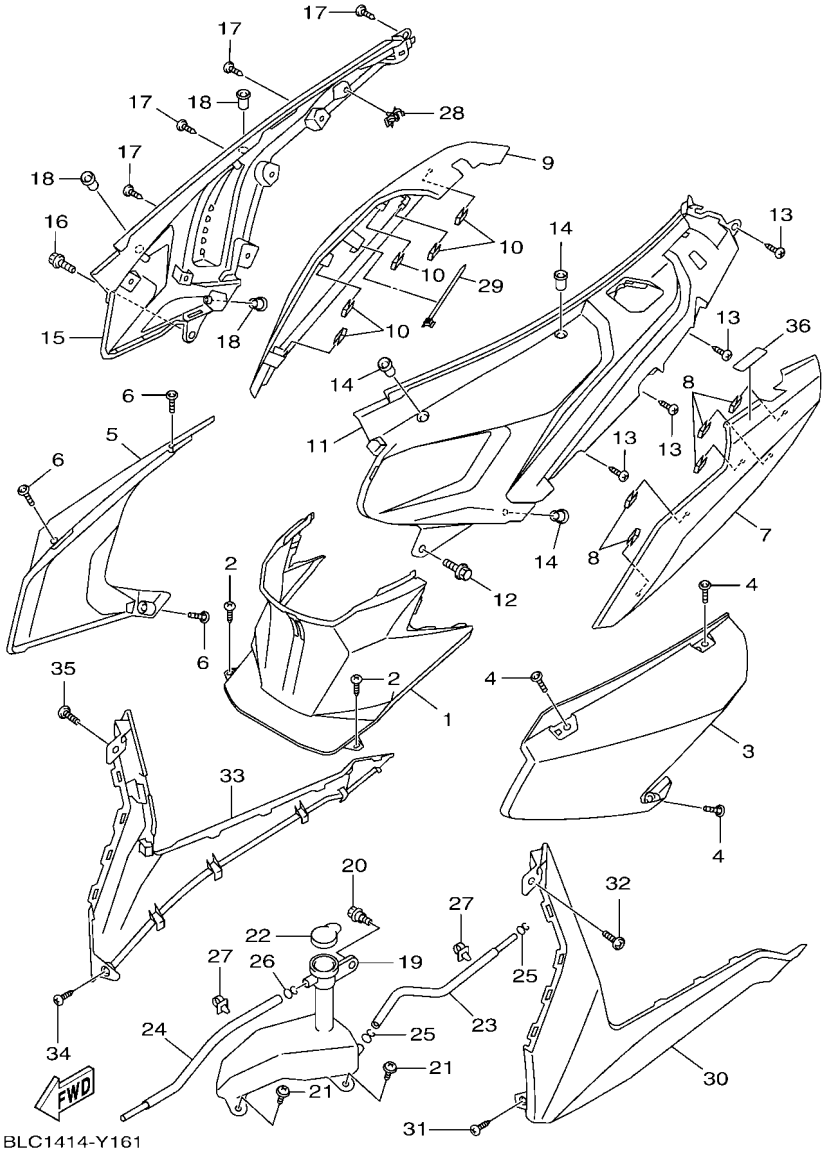

FIG. 16 側蓋

項次	部品番號	部品名稱	BLC2					備註
28	90464–16803	固定夾	1					
29	90464–22810	固定夾	1					
30	BFV–F7482–00	護片	1					
31	97707–50016	自攻螺絲	1					
32	90159–05807	螺絲附墊圈	1					
33	BFV–F7492–00	護片2	1					
34	97707–50016	自攻螺絲	1					
35	90159–05807	螺絲附墊圈	1					
36	BKB–F8308–00	貼紙組	1					

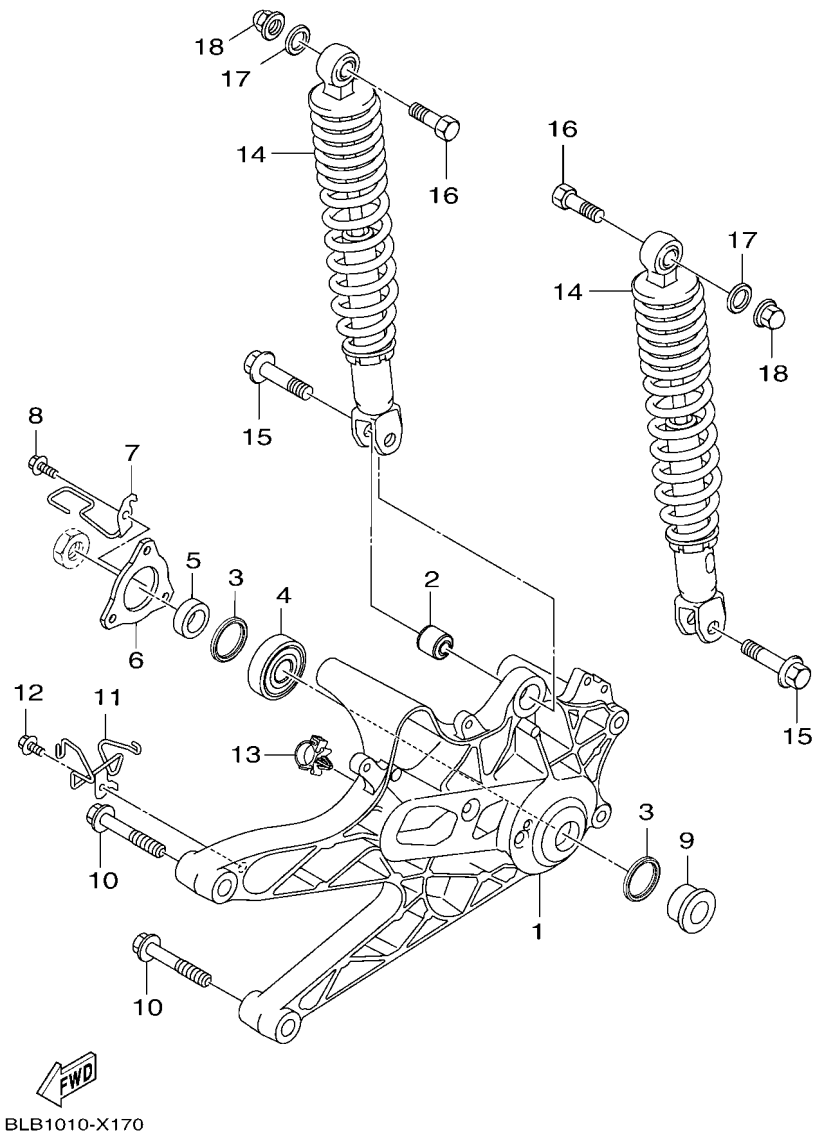

FIG. 17 後臂,懸吊系統

項次	部品番號	部品名稱	BLC2					備註
1	BFV–F2171–00	後臂	1					
2	4X6–F2216–00	後緩衝器襯套	1					
3	93109–28811	油封	2					
4	93306–303YG	軸承	1					
5	90387–17807	軸環	1					
6	B8R–F2117–00	後臂蓋	1					
7	B8R–F8216–00	支架	1					
8	95D37–06016	凸緣螺栓	3					
9	90387–17808	軸環	1					
10	95D32–10060	凸緣螺栓	2					
11	B8R–F588G–00	支架	1					
12	95D37–06016	凸緣螺栓	1					
13	90464–16803	固定夾	1					
14	BLC–F2210–00	後緩衝器總成	2					
15	90105–088F1	凸緣螺栓	2					
16	90101–10875	螺栓	2					
17	90201–101J1	平墊圈	2					
18	95307–10800	六角螺帽	2					

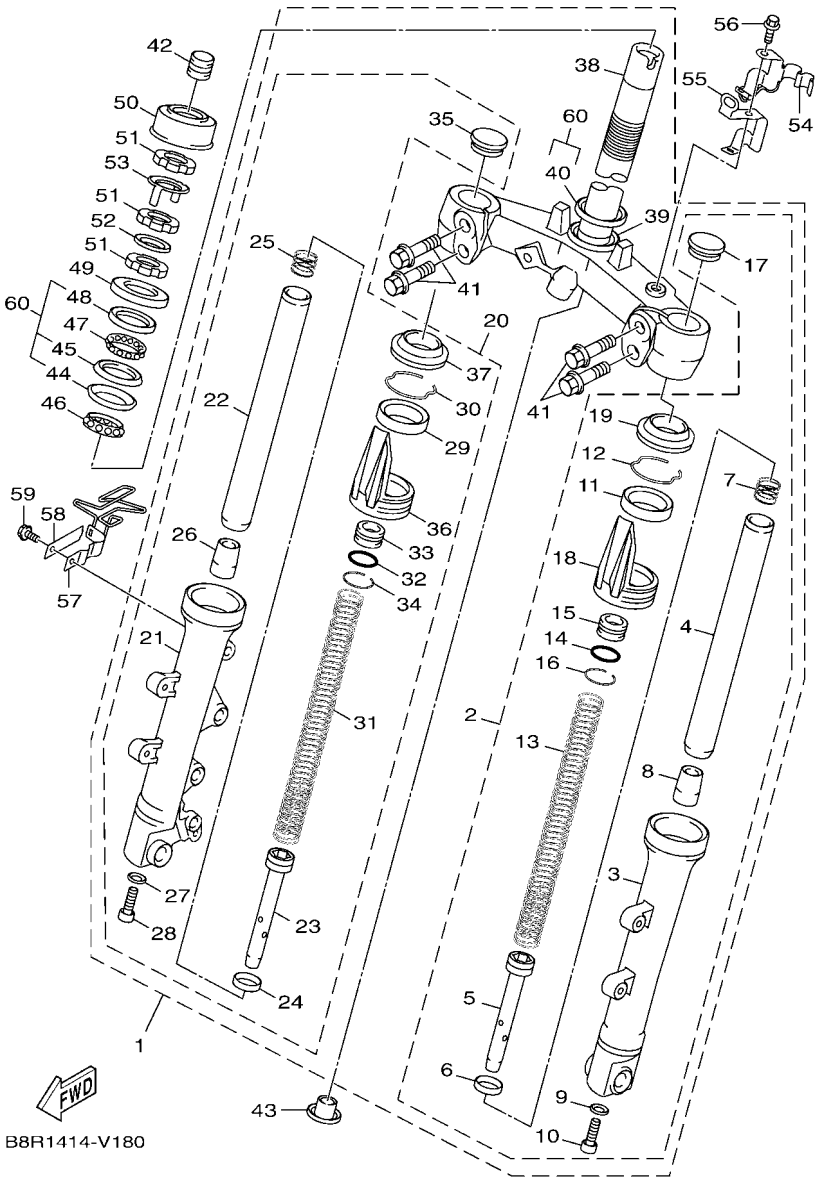

FIG. 18 前叉

項次	部品番號	部品名稱	BLC2					備註
1	BFV–F3100–00	前叉總成	1					
2	BFV–F3102–00	.左前叉內外管組	1					
3	B8R–F3126–00	..左外管	1					
4	B8R–F3110–00	..前叉內管	1					
5	2JS–F3142–00	..上彈簧座	1					
6	4P9–F318X–00	..活塞環	1					
7	4C6–F3151–00	..彈簧	1					
8	4P9–F3171–00	..前叉接筒整體	1					
9	4P9–F3158–00	..墊片	1					
10	4P9–F3181–00	..螺栓	1					
11	4C6–F3145–00	..油封	1					
12	4P9–F3157–00	..前叉C型環	1					
13	BFV–F3141–00	..前叉彈簧	1					
14	4C6–F3147–00	..護油圈	1					
15	4P9–F3113–00	..軸環	1					
16	4P9–F3155–00	..C型環	1					
17	4P9–F3154–00	..內管塞	1					
18	B2J–F331G–00	..蓋	1					
19	4P9–F3191–00	..保護罩	1					
20	BFV–F3103–00	.右前叉內外管組	1					
21	B8R–F3136–00	..右外管	1					
22	B8R–F3110–00	..前叉內管	1					
23	2JS–F3142–00	..上彈簧座	1					
24	4P9–F318X–00	..活塞環	1					
25	4C6–F3151–00	..彈簧	1					
26	4P9–F3171–00	..前叉接筒整體	1					
27	4P9–F3158–00	..墊片	1					

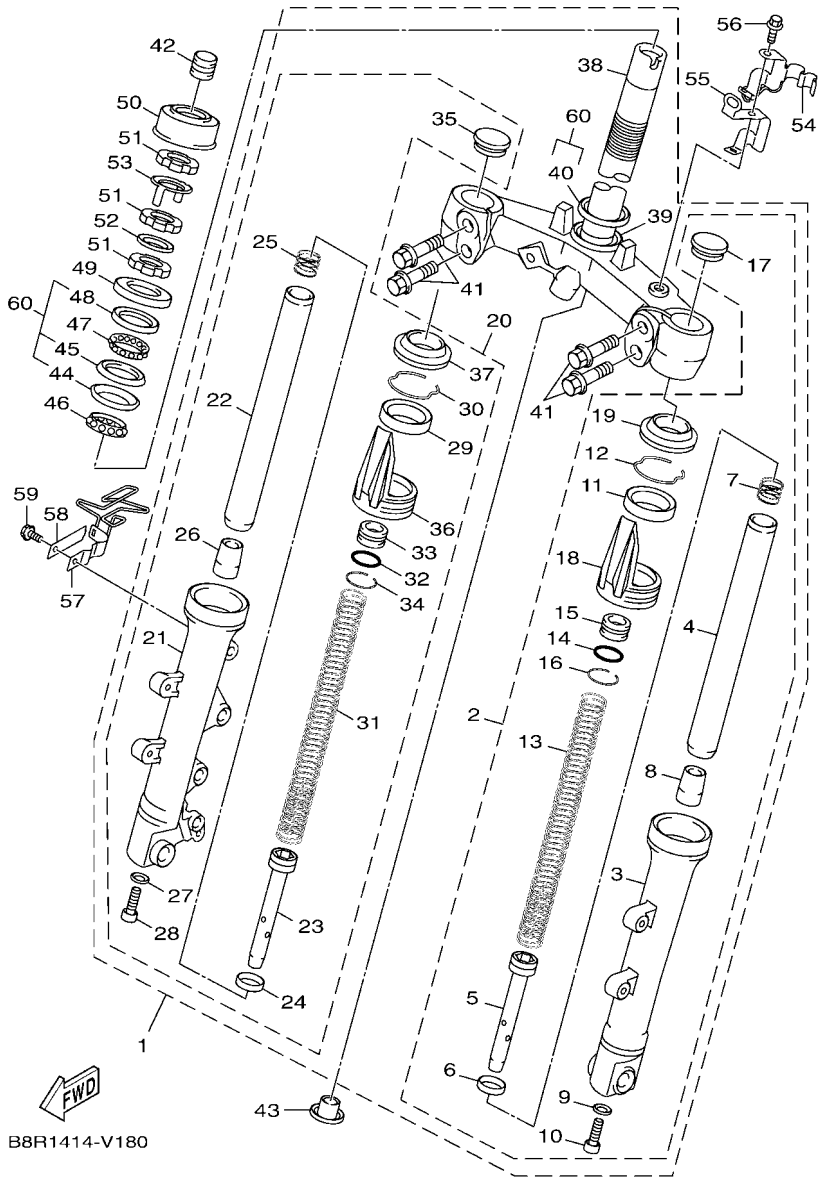

FIG. 18 前叉

項次	部品番號	部品名稱	BLC2					備註
28	4P9–F3181–00	..螺栓	1					
29	4C6–F3145–00	..油封	1					
30	4P9–F3157–00	..前叉C型環	1					
31	BFV–F3141–00	..前叉彈簧	1					
32	4C6–F3147–00	..護油圈	1					
33	4P9–F3113–00	..軸環	1					
34	4P9–F3155–00	..C型環	1					
35	4P9–F3154–00	..內管塞	1					
36	B2J–F331G–10	..蓋	1					
37	4P9–F3191–00	..保護罩	1					
38	B8R–F3340–00	.下三角架	1					
39	3KW–F3462–00	.操縱舵封圈	1					
40	4FP–F3411–10	.珠碗1	1					
41	B0J–F3346–00	.螺栓	4					
42	10B–F312G–00	塞	1					
43	5P0–F3123–00	下蓋1	1					
44	1KL–F3412–10	珠碗2	1					
45	4RT–F3412–10	珠碗2	1					
46	5VL–F341E–10	滾珠軸承	1					
47	1P6–F341E–10	滾珠軸承	1					
48	4RT–F3411–10	珠碗1	1					
49	4C6–F3416–00	珠碗蓋	1					
50	41D–F3415–00	防水蓋	1					
51	90179–25811	螺帽	3					
52	90202–26142	平墊圈	1					
53	1SK–F3418–00	特殊墊圈	1					
54	BLC–F5875–00	剎車管座 1	1					

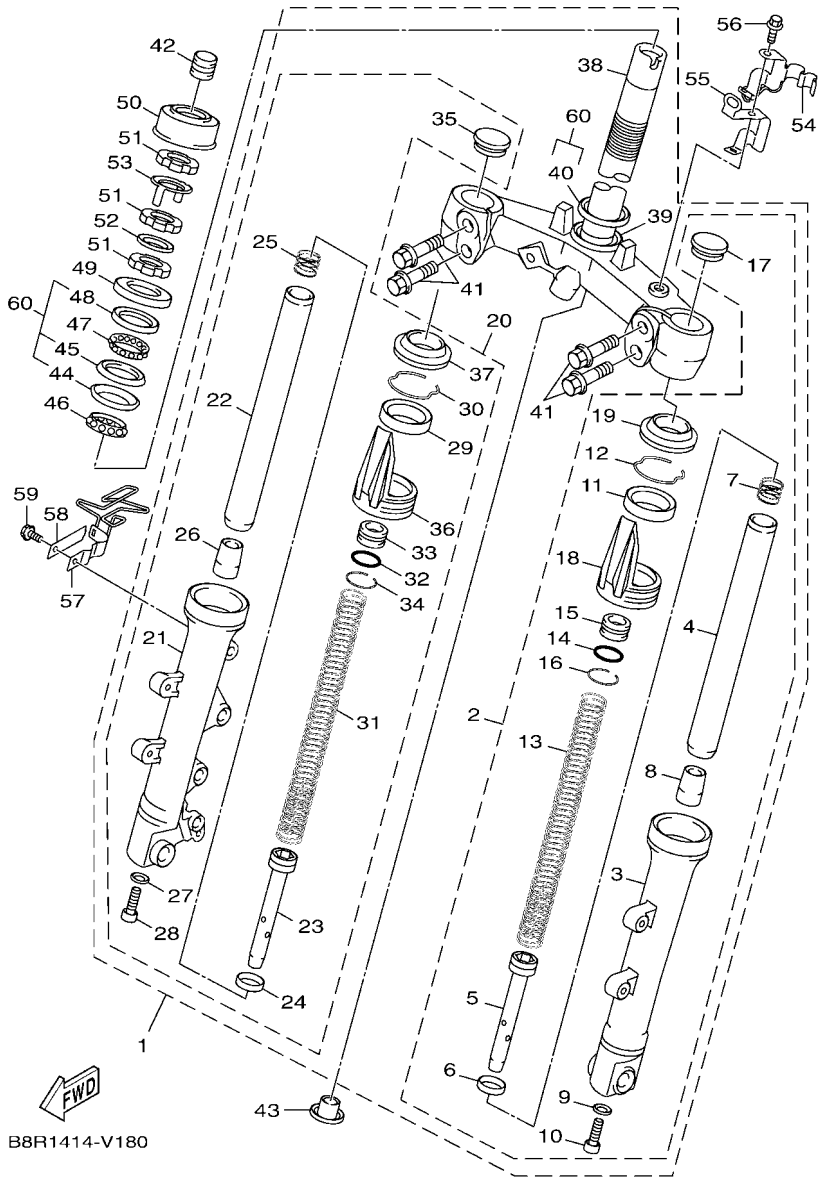

FIG. 18 前叉

項次	部品番號	部品名稱	BLC2					備註
55	BLC–F5875–10	剎車管座 1	1					
56	95D02–06012	凸緣螺栓	1					
57	B8R–F5876–00	剎車管座2	1					
58	B8R–F5876–10	剎車管座2	1					
59	95D07–06014	螺栓	1					
60	B0J–W0054–10	珠碗組	1					

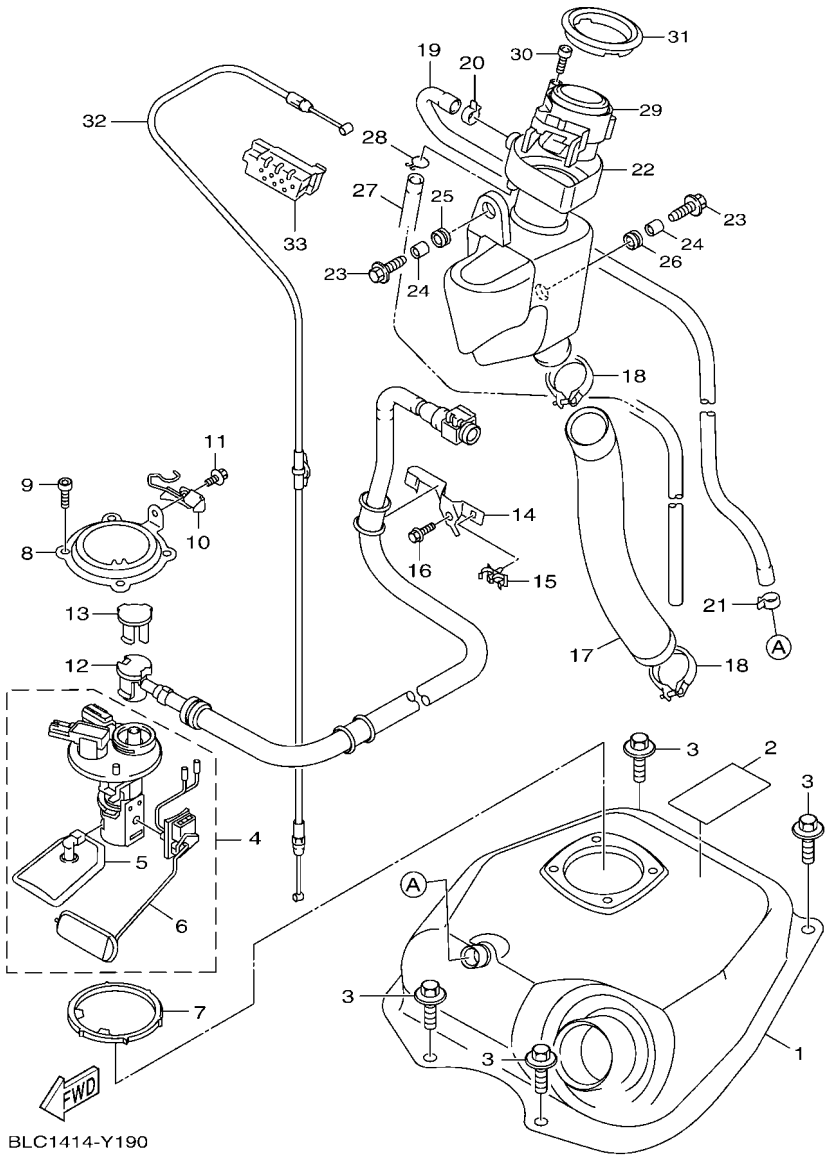

FIG. 19 汽油箱

項次	部品番號	部品名稱	BLC2					備註
1	B8R–F4110–00–33	汽油箱總成	1					山葉黑
2	5D9–F414G–00	保護貼膜	1					
3	90119–068B4	螺栓	4					
4	B8R–E3907–01	汽油泵浦	1					
5	1SH–E3915–00	.濾清器	1					
6	B8R–H5752–01	.汽油油面感應器	1					
7	1DB–F414G–01	封圈	1					
8	B8R–F4491–00	汽油泵浦支架	1					
9	91312–05010	內六角螺栓	4					
10	B8R–F4491–10	汽油泵浦支架	1					
11	95802–06010	螺栓	1					
12	B8R–E3971–00	汽油管	1					
13	B8R–F4135–00	止夾	1					
14	B8R–F419A–00	汽油管支架	1					
15	90464–16803	固定夾	1					
16	95E32–06012	凸緣螺栓	1					
17	B8R–F4316–00	管6	1					
18	90450–55803	束環	2					
19	B8R–F4317–00	油管	1					
20	90467–18185	止夾	1					
21	90467–14806	止夾	1					
22	BFV–F4280–00	副油箱	1					
23	90119–06864	螺栓	2					
24	90387–07598	軸環	2					
25	90480–18290	橡膠襯套	1					
26	90480–01326	橡膠襯套	1					
27	BFV–F4318–00	管	1					

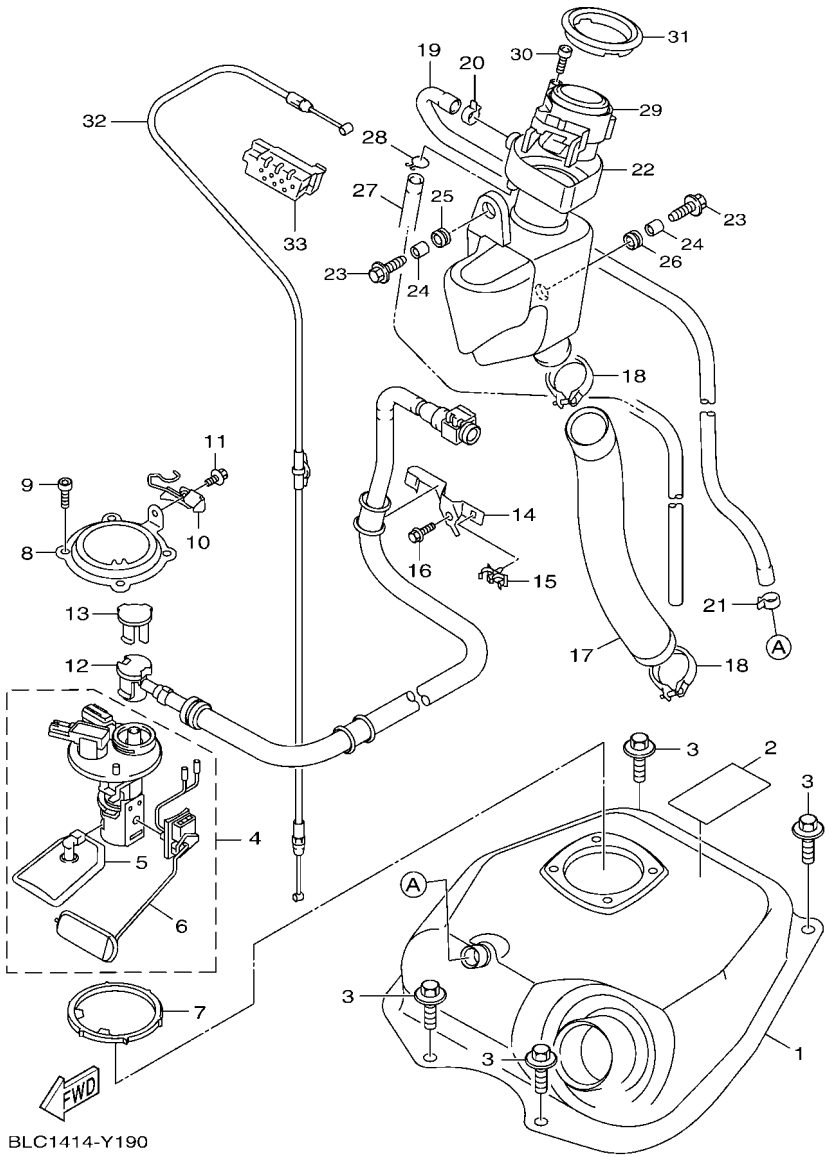

FIG. 19 汽油箱

項次	部品番號	部品名稱	BLC2					備註
28	90467–12052	止夾	1					
29	B8R–F4610–00	汽油箱蓋總成	1					
30	90155–04800	十字平凹口螺絲	3					
31	BFV–F467E–00	蓋	1					
32	BLC–F4494–00	鋼索	1					
33	BFV–F413U–00	塑膠蓋	1					

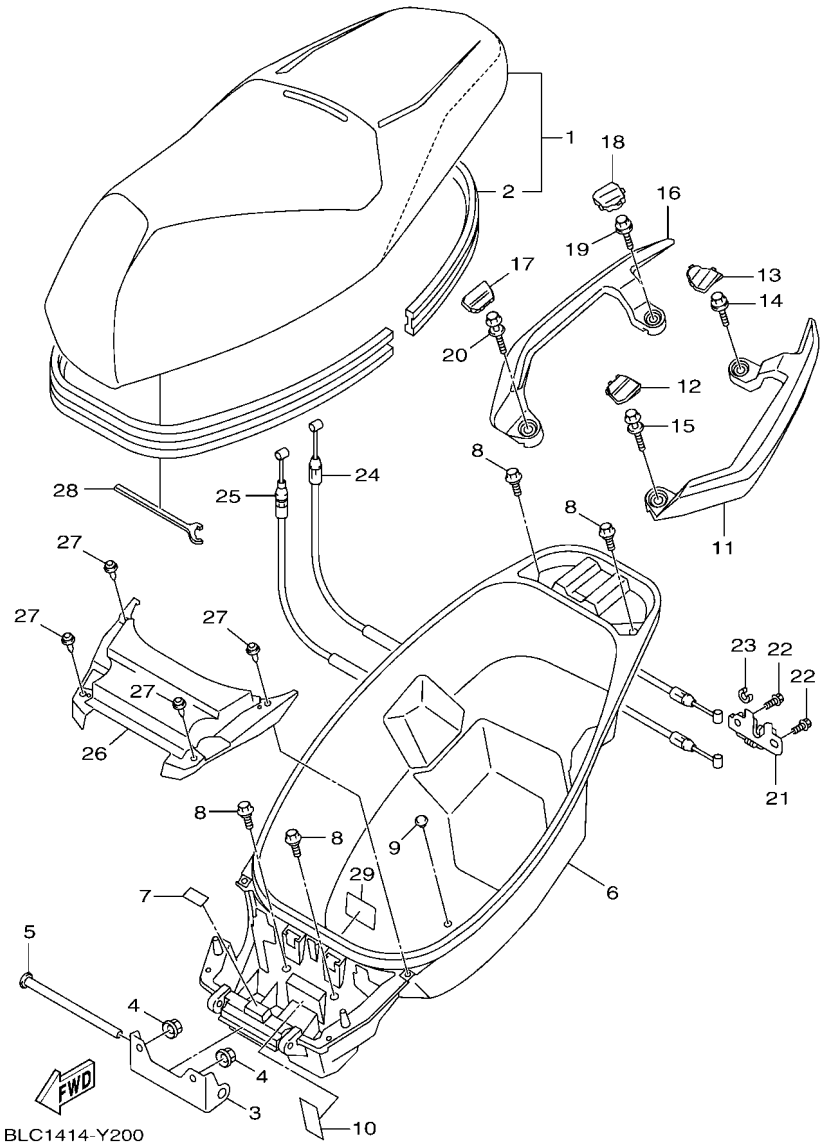

FIG. 20 座墊

項次	部品番號	部品名稱	BLC2					備註
1	BLC–F4730–10	雙人座墊	1					
2	BFV–F475M–00	.封圈	1					
3	4CW–F4726–01	座墊活葉	1					
4	95707–06500	凸緣螺帽	2					
5	90241–10015	銷	1					
6	BFV–F473R–00	置物箱	1					
7	90520–06806	防震墊	1					
8	90109–06885	螺栓	4					
9	3GF–F6199–00	塞	1					
10	90520–02821	防震墊	1					
11	BFV–F474A–00–P0	輔助把手	1					黑
12	BFV–F6133–01	蓋	1					
13	BFV–H4385–00	蓋 1	1					
14	90119–068D9	螺栓	1					
15	90119–068E1	螺栓	1					
16	BFV–F474W–00–P0	輔助把手	1					黑
17	BFV–F6134–01	蓋 2	1					
18	BFV–H4386–00	蓋 2	1					
19	90119–068D9	螺栓	1					
20	90119–068E1	螺栓	1					
21	BLC–F4780–00	座墊鎖總成	1					
22	95E32–06012	凸緣螺栓	2					
23	2TS–F4768–00	停止器	1					
24	BLC–F478E–00	座墊鎖鋼索	1					
25	BLC–F479D–00	座墊鎖鋼索 2	1					
26	BFV–H2129–00	蓄電池蓋	1					
27	90269–06803	塑膠螺絲	4					

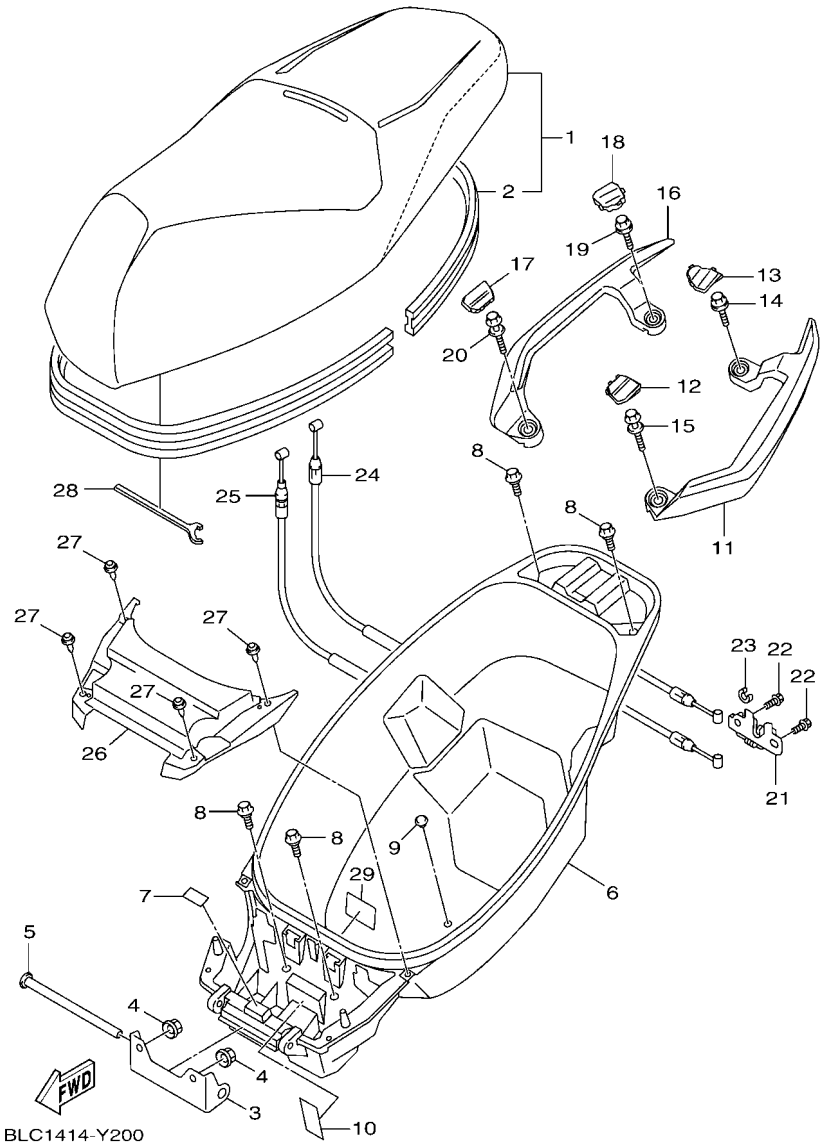

FIG. 20 座墊

項次	部品番號	部品名稱	BLC2					備註
28	B8R–F8135–00	特殊扳手	1					
29	BKB–F476G–00	標誌	1					

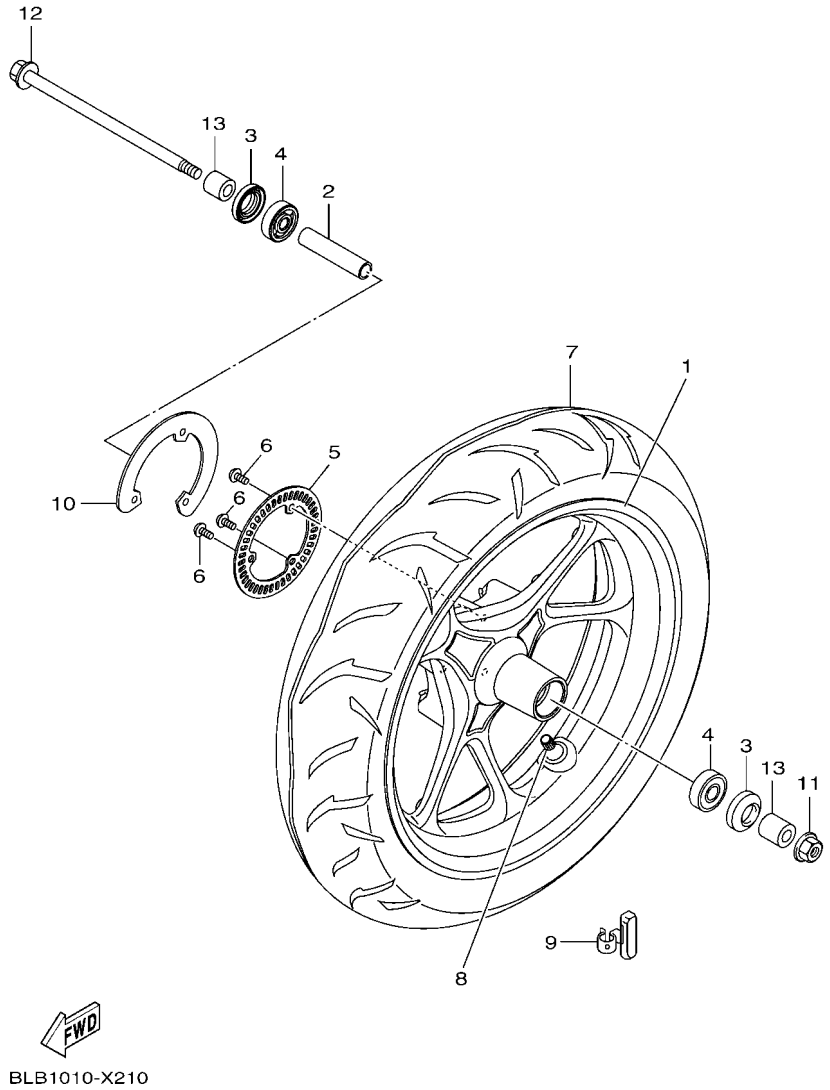

FIG. 21 前車輪

項次	部品番號	部品名稱	BLC2					備註
1	BFV–F5168–00–P3	前鑄輪	1					深藍
2	90387–10839	軸環	1					
3	93106–20808	油封	2					
4	93306–300Y4	軸承	2					
5	1DK–F517G–00	感知器轉子	1					
6	90149–05030	螺絲	3					
7	94112–13802	輪胎	1					
8	93900–00836	氣嘴	1					
9	5MT–25398–00	輪均衡器(10G)	1					
	5MT–25398–10	輪均衡器(20G)	1					
	5MT–25398–20	輪均衡器(30G)	1					
10	BFV–F518A–00	板	1					
11	95607–10200	U型螺帽	1					
12	4VP–F5181–10	前輪軸	1					
13	90387–10824	軸環	2					

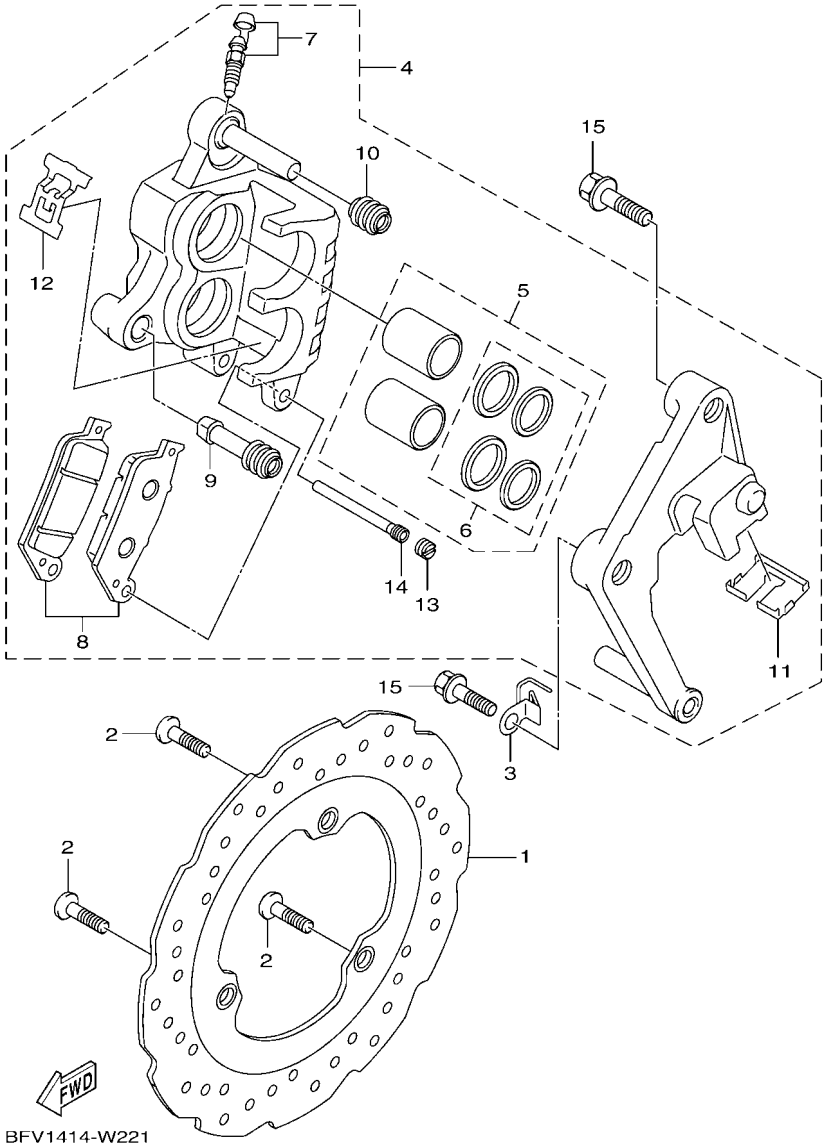

FIG. 22 前剎車卡鉗

項次	部品番號	部品名稱	BLC2					備註
1	BFV–F582U–00	剎車碟盤	1					
2	90109–08087	螺栓	3					
3	B8R–F3317–00	前輪感知器支架	1					
4	BFV–F580U–00	卡鉗總成	1					
5	5NW–W0057–00	.卡鉗活塞	1					
6	5NW–W0047–00	..卡鉗封圈組	1					
7	2JS–W0048–20	.卡鉗螺栓組	1					
8	BFV–W0045–00	.前剎車片組	1					
9	5ML–F5927–00	.卡鉗保護罩	1					
10	5ML–F5937–00	.防塵套 2	1					
11	1MS–F5919–10	.剎車片軛簧	1					
12	1MS–F5919–00	.剎車片軛簧	1					
13	2JS–F5139–00	.剎車片銷塞	1					
14	2JS–F5914–00	.剎車片銷	1					
15	90105–10638	凸緣螺栓	2					

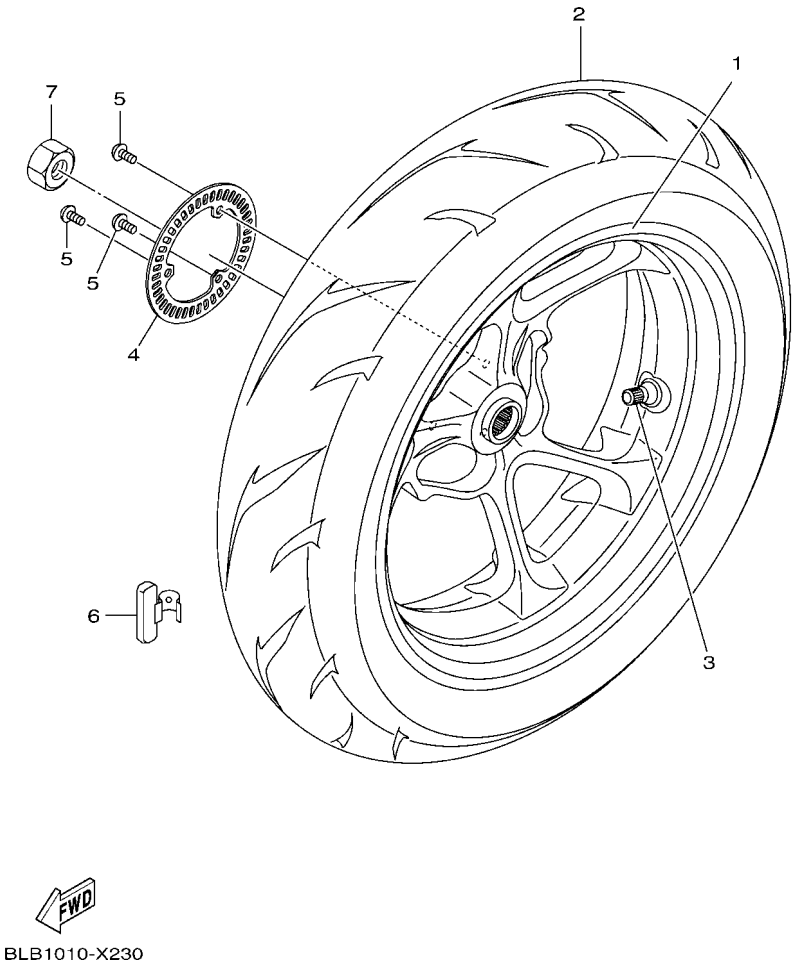

FIG. 23 後車輪

項次	部品番號	部品名稱	BLC2					備註
1	BFV–F5338–00–P3	後鑄輪	1					深藍
2	94113–13808	輪胎	1					
3	93900–00836	氣嘴	1					
4	1DK–F517G–00	感知器轉子	1					
5	90149–05030	螺絲	3					
6	5MT–25398–00	輪均衡器(10G)	1					
	5MT–25398–10	輪均衡器(20G)	1					
	5MT–25398–20	輪均衡器(30G)	1					
7	90185–16800	自鎖螺帽	1					

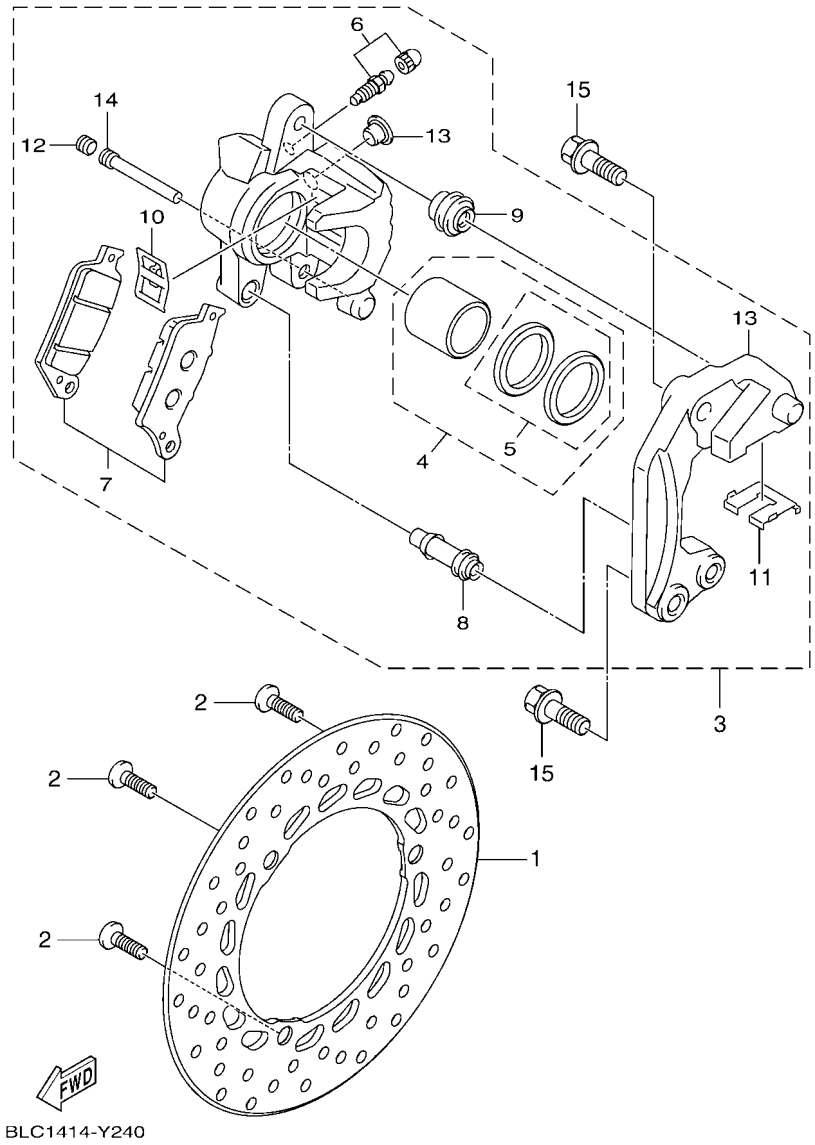

FIG. 24 後剎車卡鉗

項次	部品番號	部品名稱	BLC2					備註
1	B8R–F582W–00	後剎車碟盤	1					
2	90109–08087	螺栓	3					
3	B8R–F580W–00	卡鉗總成	1					
4	1DK–W0057–10	.卡鉗活塞	1					
5	5S9–W0047–00	..卡鉗封圈組	1					
6	1MS–W0048–00	.卡鉗螺栓組	1					
7	2JS–W0046–30	.剎車片組	1					
8	5ML–F5927–00	.卡鉗保護罩	1					
9	5ML–F5937–00	.防塵套 2	1					
10	1DK–F5919–00	.剎車片軛簧	1					
11	1DK–F5919–10	.剎車片軛簧	1					
12	1MS–F5139–00	.剎車片銷塞	1					
13	5AG–F5845–00	.蓋	1					
14	1DK–F5924–00	.剎車片銷	1					
15	90105–10638	凸緣螺栓	2					

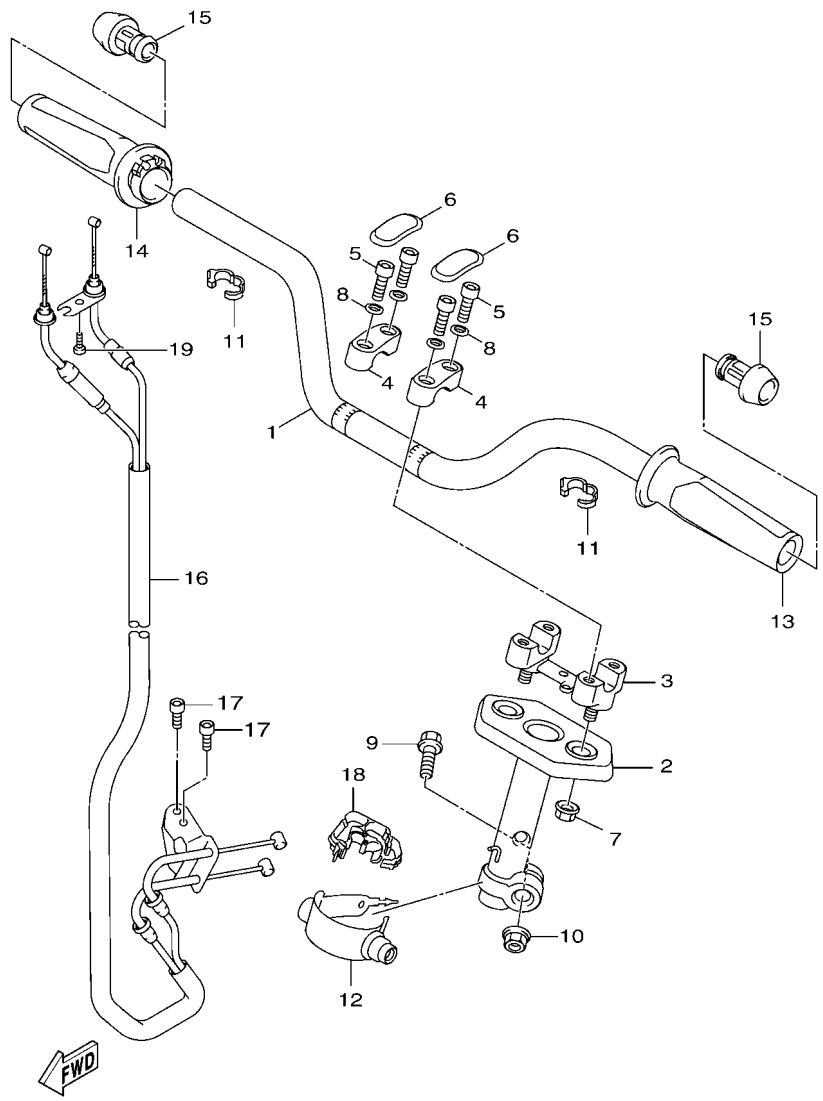

BFV1414-W250

FIG. 25 轉向把手,鋼索

項次	部品番號	部品名稱	BLC2					備註
1	BFV–F6111–00	把手整體	1					
2	BFV–F3461–00	把手支架	1					
3	5FH–F3442–10–98	把手固定座	1					平光黑
4	1MH–F3441–01–98	把手上蓋座	2					平光黑
5	91317–08025	內六角螺栓	4					
6	1MH–F3469–00	蓋	2					
7	90185–10814	自鎖螺帽	2					
8	90201–08823	平墊圈	4					
9	90105–10864	凸緣螺栓	1					
10	90185–10814	自鎖螺帽	1					
11	90464–16802	固定夾	2					
12	1DK–F6124–00	把手固定螺栓套	1					
13	BFV–F6241–01	左握把	1					
14	BFV–F6240–01	右握把總成	1					
15	B8R–F6246–00	握把端子	2					
16	BLC–F6301–00	節流鋼索總成	1					
17	91312–05010	內六角螺栓	2					
18	B8R–F627E–00	配線固定夾	1					
19	91317–05014	內六角螺栓	1					

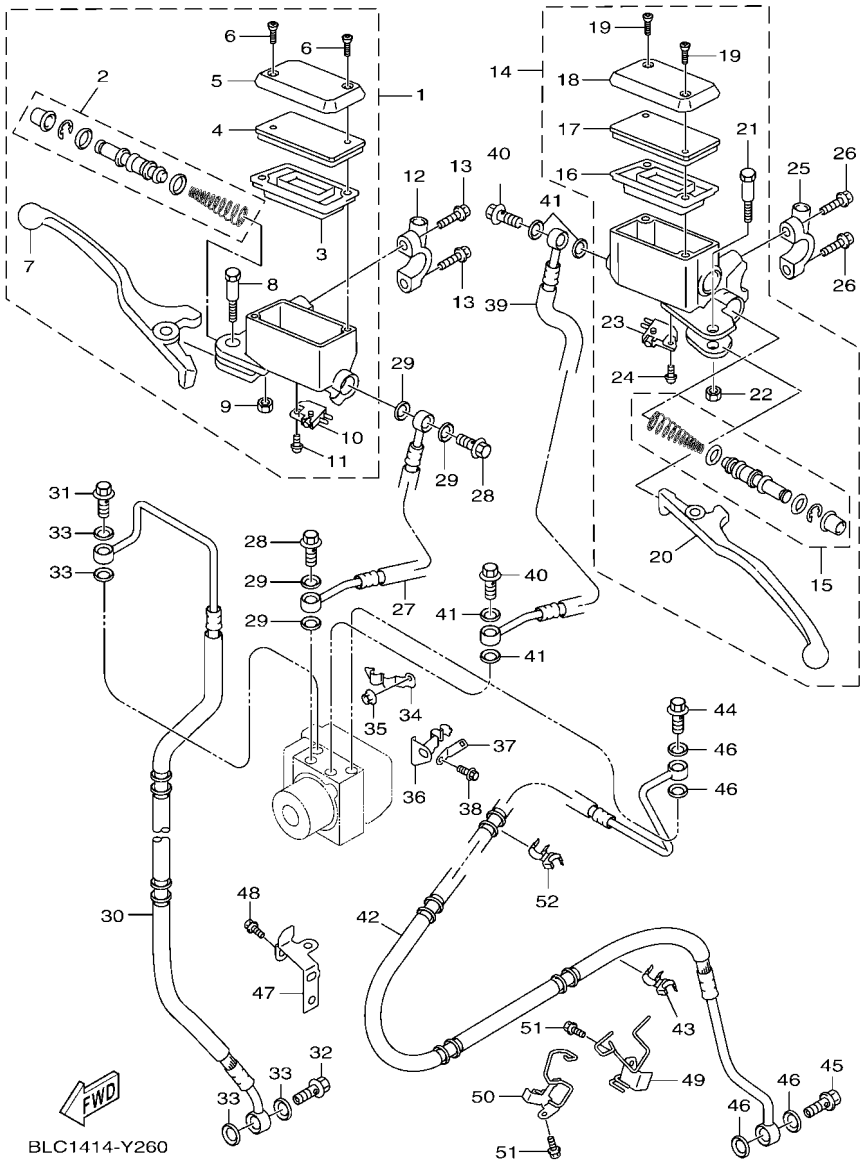

FIG. 26 前主缸

項次	部品番號	部品名稱	BLC2					備註
1	BFV–F5870–00	主缸總成	1					
2	B8R–W0041–00	.主缸推進器	1					
3	BFV–F5854–00	.油槽隔片	1					
4	BFV–F5855–00	.防塵蓋	1					
5	BFV–F5852–00	.油槽蓋	1					
6	98707–04012	.平頭螺絲	2					
7	BFV–H3922–00	.把手2	1					
8	41D–H3945–00	.把手螺栓	1					
9	95607–06100	.U 型螺帽	1					
10	2DP–H3980–01	.剎車燈開關總成	1					
11	97602–04214	.盤頭螺絲附墊圈	1					
12	BFV–F5867–10	主缸支架	1					
13	95027–06030	凸緣螺栓	2					
14	BFV–F5870–10	主缸總成	1					
15	B8R–W0041–00	.主缸推進器	1					
16	BFV–F5854–10	.油槽隔片	1					
17	BFV–F5855–10	.防塵蓋	1					
18	BFV–F5852–10	.油槽蓋	1					
19	98707–04012	.平頭螺絲	2					
20	BFV–H3912–00	.把手1	1					
21	41D–H3945–00	.把手螺栓	1					
22	95607–06100	.U 型螺帽	1					
23	2DP–H2530–01	.剎車燈開關總成	1					
24	97602–04214	.盤頭螺絲附墊圈	1					
25	BFV–F5867–00	主缸支架	1					
26	95027–06030	凸緣螺栓	2					
27	BFV–F5872–00	剎車管1	1					

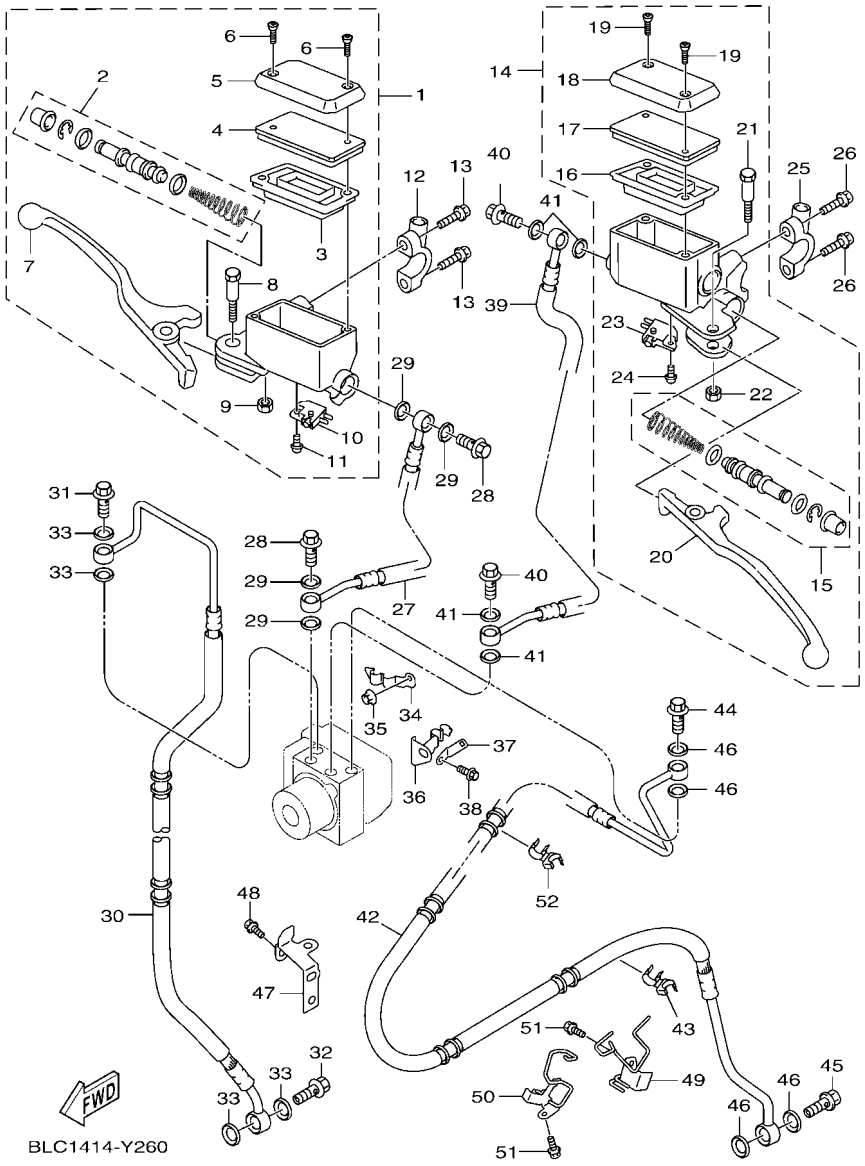

FIG. 26 前主缸

項次	部品番號	部品名稱	BLC2					備註
28	90401–10805	接合螺栓	2					
29	90201–10118	平墊圈	4					
30	B8R–F5874–00	剎車管3	1					
31	90401–10805	接合螺栓	1					
32	90401–10805	接合螺栓	1					
33	90201–10118	平墊圈	4					
34	BFV–F5886–00	固定座	1					
35	95702–06500	凸緣螺帽	1					
36	B8R–F587A–00	剎車管固定座4	1					
37	B8R–F587A–10	剎車管固定座4	1					
38	95D02–06012	凸緣螺栓	1					
39	BFV–F5873–00	剎車管2	1					
40	90401–10805	接合螺栓	2					
41	90201–10118	平墊圈	4					
42	B8R–F581J–00	剎車管 4	1					
43	90464–16803	固定夾	1					
44	90401–10805	接合螺栓	1					
45	90401–10805	接合螺栓	1					
46	90201–10118	平墊圈	4					
47	B8R–F5522–10	支架	1					
48	95D07–06012	螺栓	1					
49	B8R–F588F–00	剎車管固定座5	1					
50	B8R–F588F–10	剎車管固定座5	1					
51	95E32–06012	凸緣螺栓	2					
52	90464–17803	固定夾	1					

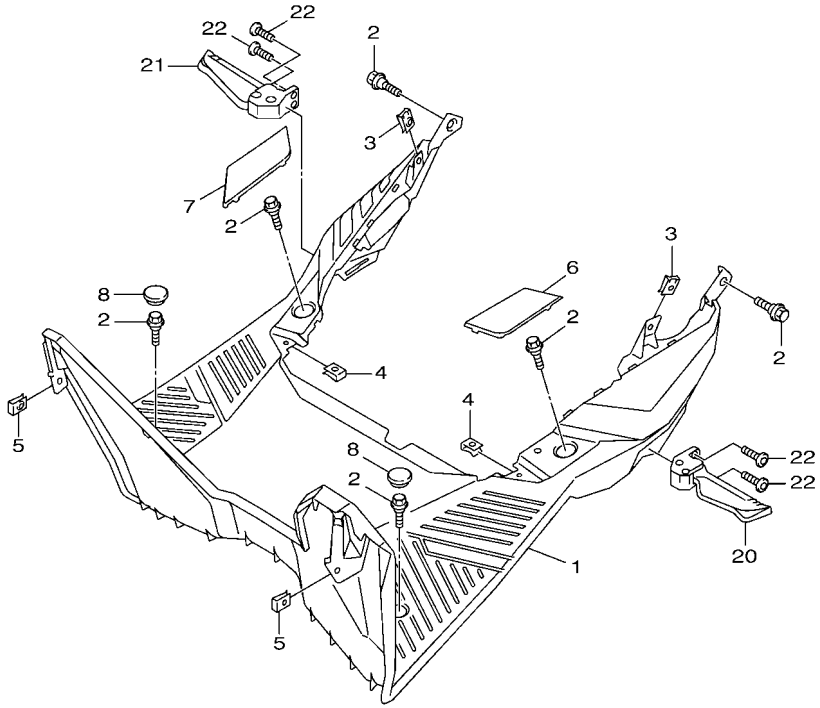

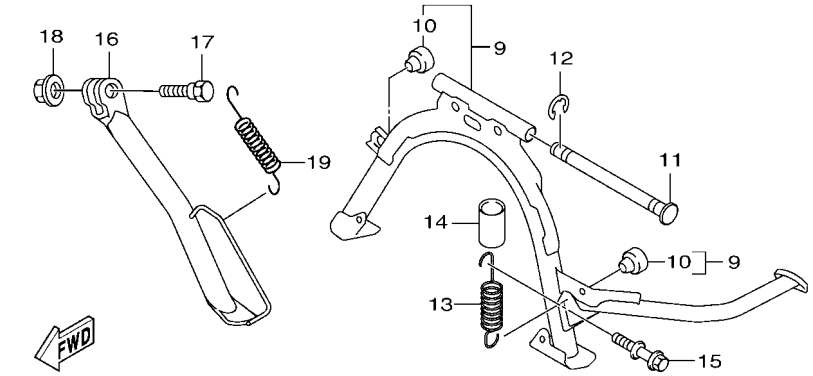

BFV1414-W270

FIG. 27 支架,置腳踏

項次	部品番號	部品名稱	BLC2					備註
1	BFV–F7481–00	置腳踏板 1	1					
2	90109–06885	螺栓	6					
3	90183–06813	螺絲夾片	2					
4	90183–05827	螺絲夾片	2					
5	90183–05803	螺絲夾片	2					
6	BFV–F7486–00	蓋1	1					
7	BFV–F7487–00	蓋2	1					
8	BCC–F7285–00	蓋	2					
9	BFV–XF711–00	主支架	1					
10	1SH–F6257–01	.防震墊	2					
11	2BM–F7112–00	主支架軸	1					
12	99002–09600	夾環	1					
13	90506–35829	主支架彈簧	1					
14	B8R–F247C–00	管 3	1					
15	5ML–F7254–00	段差螺栓	1					
16	BFV–F7311–00	側支架	1					
17	90109–10005	螺栓	1					
18	90185–10110	自鎖螺帽	1					
19	90506–26815	主支架彈簧	1					
20	1DK–F7431–20	左後置腳架	1					
21	1DK–F7441–20	右後置腳架	1					
22	92012–08020	內六角圓頭螺栓	4					

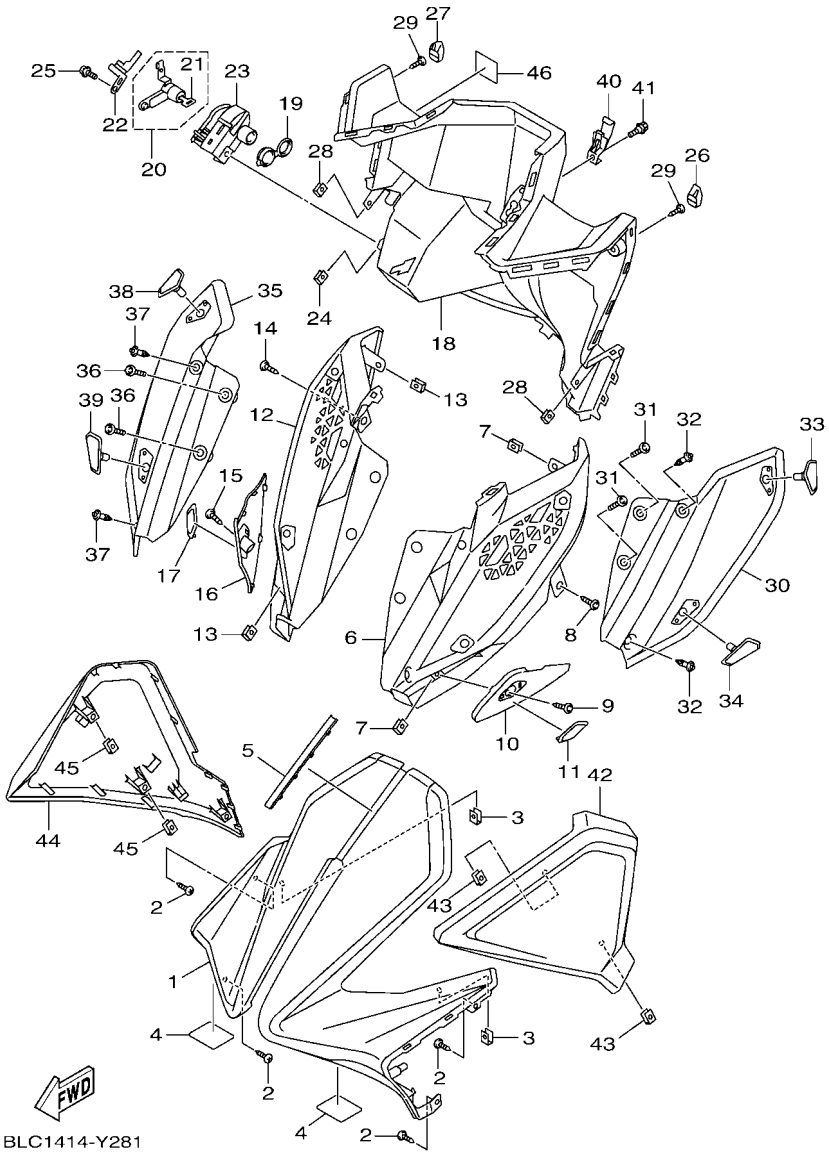

FIG. 28 腳防護擋板

項次	部品番號	部品名稱	BLC2					備註
1	BLC–F8311–40	腳防護板1	1					
2	97707–50012	自攻螺絲	4					
3	90183–06813	螺絲夾片	2					
4	90520–02834	防震墊	2					
5	BLC–F8336–00	板(頭燈上方蓋)	1					
6	BLC–F8396–00	板 1	1					
7	90183–05827	螺絲夾片	2					
8	97707–50016	自攻螺絲	1					
9	90169–05001	自攻螺絲	1					
10	BLC–F8349–00	蓋	1					
11	BLC–F319U–00	蓋	1					
12	BLC–F8397–00	板 2	1					
13	90183–05827	螺絲夾片	2					
14	97707–50016	自攻螺絲	1					
15	90169–05001	自攻螺絲	1					
16	BLC–F834J–00	蓋	1					
17	BLC–F319W–00	蓋	1					
18	BLC–F8300–00	腳防護板總成	1					
19	B5D–F465B–00	轉子蓋	1					
20	BLC–F465E–00	轉子總成	1					
21	BLC–F4652–09–A0	.鑰匙	2					
	BLC–F4652–09–B0	.鑰匙	2					
22	BLC–F117K–00	固定座	1					
23	BLC–F464G–00	座墊鎖蓋	1					
24	90183–06813	螺絲夾片	1					
25	95D37–06020	凸緣螺栓	1					
26	BFV–F845W–00	蓋 1	1					

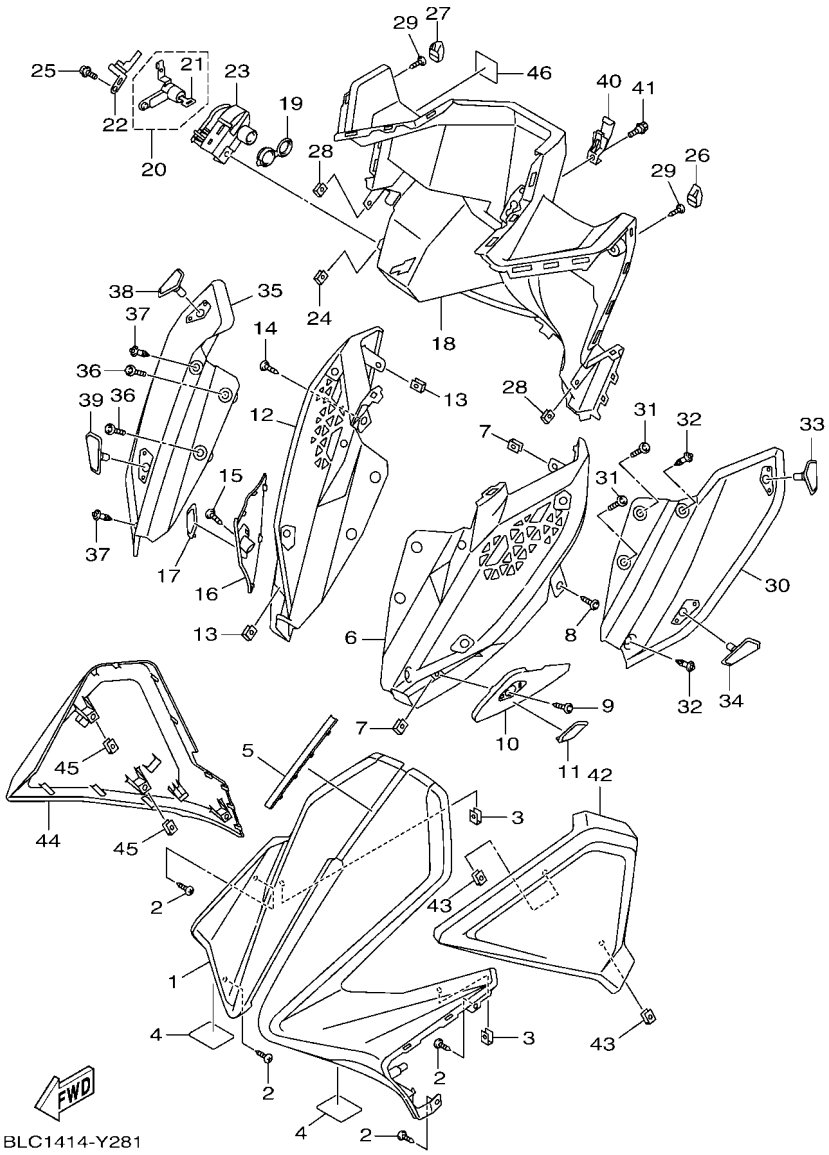

FIG. 28 腳防護擋板

項次	部品番號	部品名稱	BLC2					備註
27	BFV–F845X–00	蓋 2	1					
28	90183–05827	螺絲夾片	2					
29	97707–50016	自攻螺絲	2					
30	BLC–F839K–00	蓋1	1					
31	92012–05025	內六角圓頭螺栓	2					
32	90269–06803	塑膠螺絲	2					
33	BLC–F635H–00	蓋	1					
34	BLC–F7475–00	蓋 1	1					
35	BLC–F839L–00	蓋 2	1					
36	92012–05025	內六角圓頭螺栓	2					
37	90269–06803	塑膠螺絲	2					
38	BLC–F635J–00	蓋	1					
39	BLC–F7476–00	蓋 2	1					
40	BFV–F8257–00	鉤 1	1					
41	90111–06854	內六角圓頭螺栓	1					
42	BLC–F8351–00–P3	整流罩(左前側蓋)	1					用於白
43	90183–05827	螺絲夾片	2					
44	BLC–F8377–00–P3	右前側蓋	1					用於白
45	90183–05827	螺絲夾片	2					
46	BFV–F118K–00	注意標籤	1					

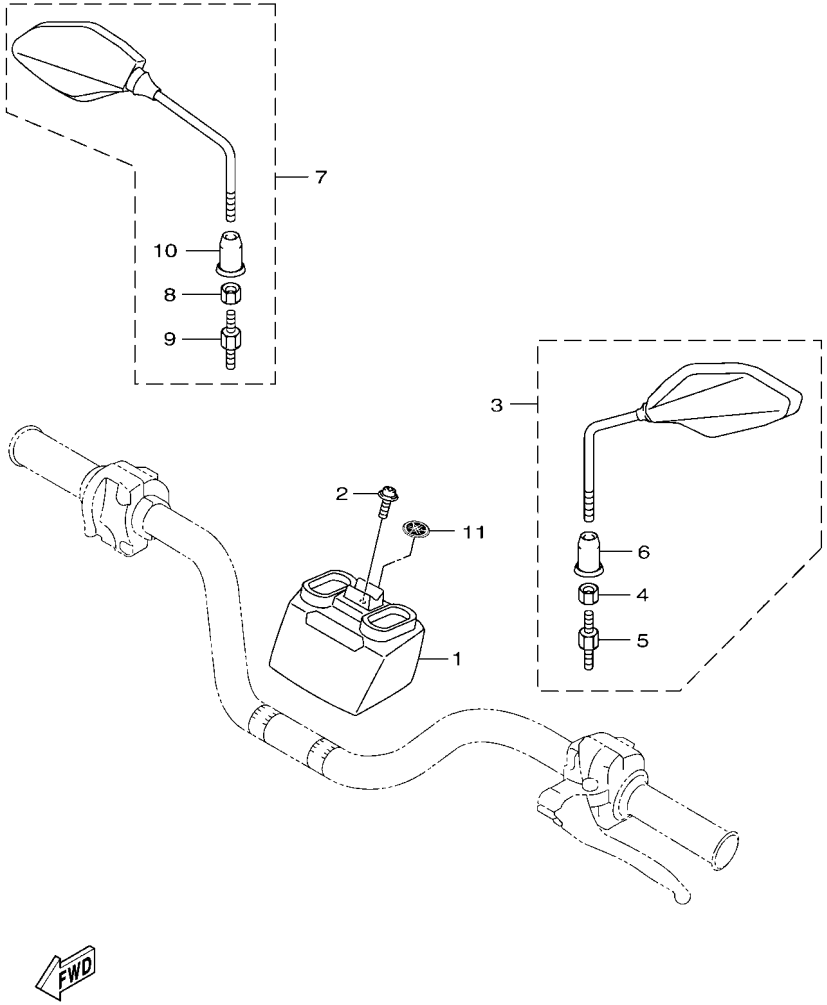

FIG. 29 擋風鏡

項次	部品番號	部品名稱	BLC2					備註
1	BFV–F6143–00	把手蓋1	1					
2	90159–05802	螺絲附墊圈	1					
3	BFV–F6280–00	左後視鏡總成	1					
4	5FA–F6294–00	.螺帽	1					
5	5FA–F6386–01	.特殊螺栓	1					
6	5FA–F629T–00	.保護罩	1					
7	BFV–F6290–00	右後視鏡總成	1					
8	5FA–F6294–00	.螺帽	1					
9	5FA–F6356–01	.特殊螺栓	1					
10	5FA–F629T–00	.保護罩	1					
11	BCC–F175B–00	音叉標誌	1					

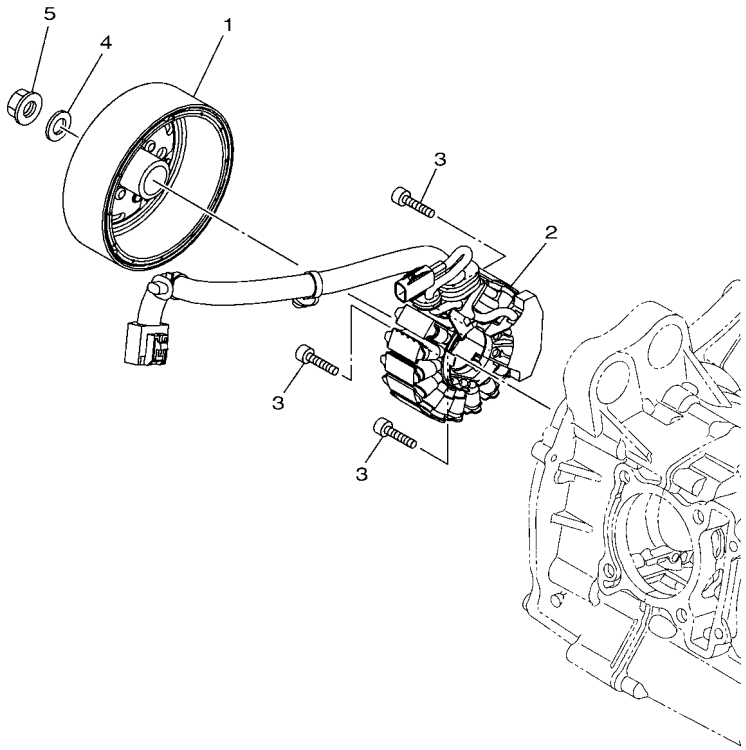

B6H1460-U310

FIG. 30 發電機

項次	部品番號	部品名稱	BLC2					備註
1	B6H–H1450–00	轉子總成	1					
2	B8R–H1410–00	電樞總成	1					
3	90110–06880	內六角螺栓	3					
4	90201–12688	平墊圈	1					
5	90179–12004	螺帽	1					

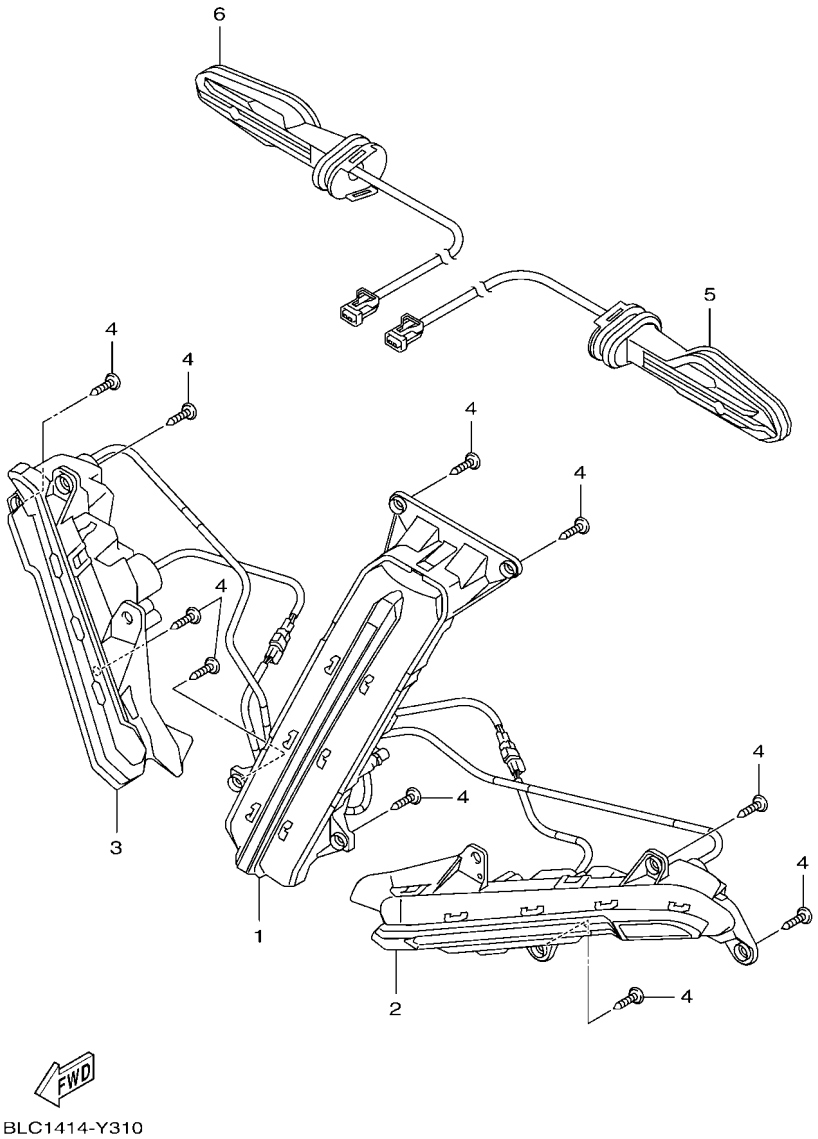

FIG. 31 方向燈 1

項次	部品番號	部品名稱	BLC2					備註
1	BLC–H4410–00	位置燈總成 1	1					
2	BLC–H3310–00	前方向燈總成1	1					
3	BLC–H3320–00	前方向燈總成2	1					
4	97702–50016	自攻螺絲	10					
5	B1X–H330A–10	方向燈總成 A	1					
6	B1X–H330B–00	方向燈總成 B	1					

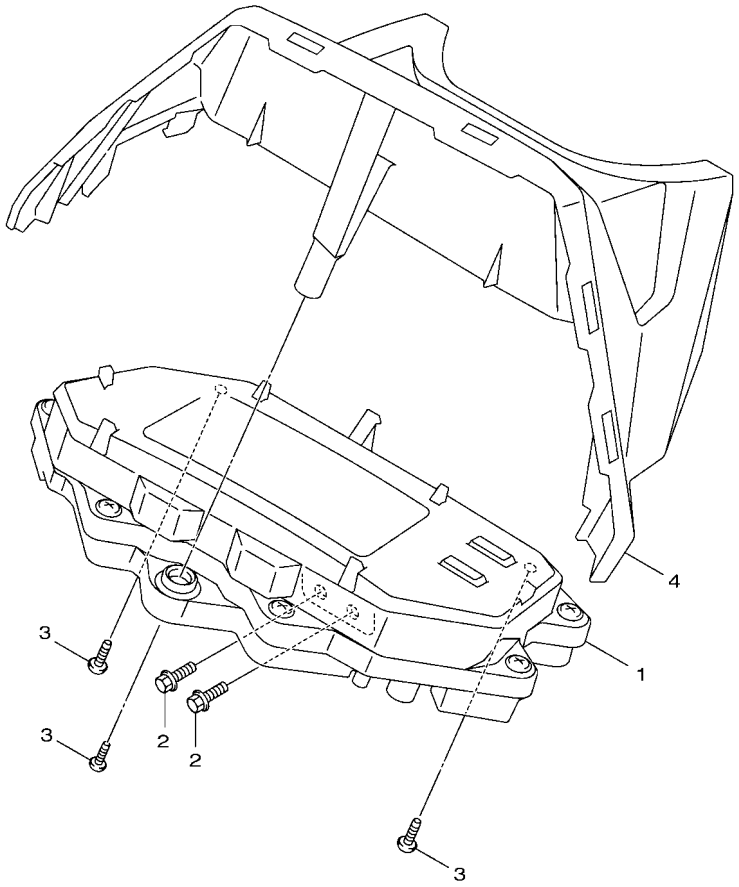

BLC1414-Y320

FIG. 32 儀錶

項次	部品番號	部品名稱	BLC2					備註
1	BLC–H3510–00	速度錶總成	1					
2	95807–06012	凸緣螺栓	2					
3	97702–50016	自攻螺絲	3					
4	BLC–H3559–00	速度錶蓋	1					

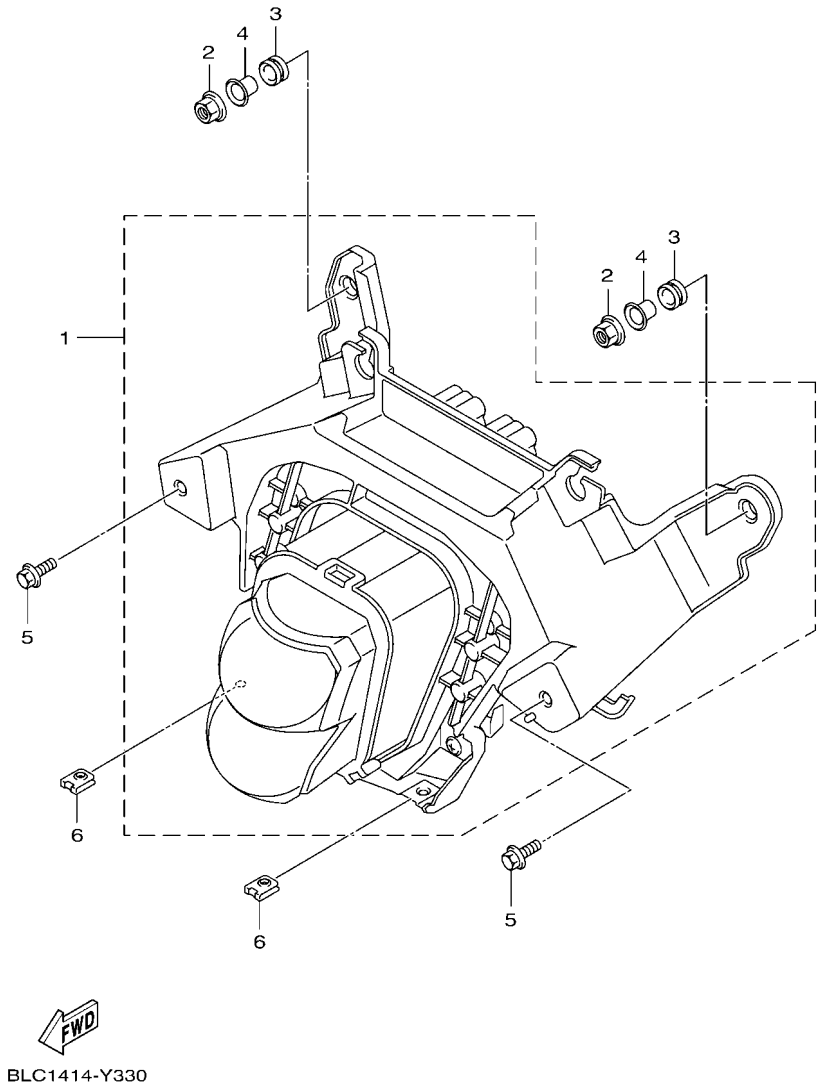

FIG. 33 頭燈

項次	部品番號	部品名稱	BLC2					備註
1	BLC–H4300–01	頭燈總成	1					
2	95702–06500	凸緣螺帽	2					
3	90480–13398	橡膠襯套	2					
4	90387–067N5	軸環	2					
5	90119–06821	螺栓	2					
6	90183–06813	螺絲夾片	2					

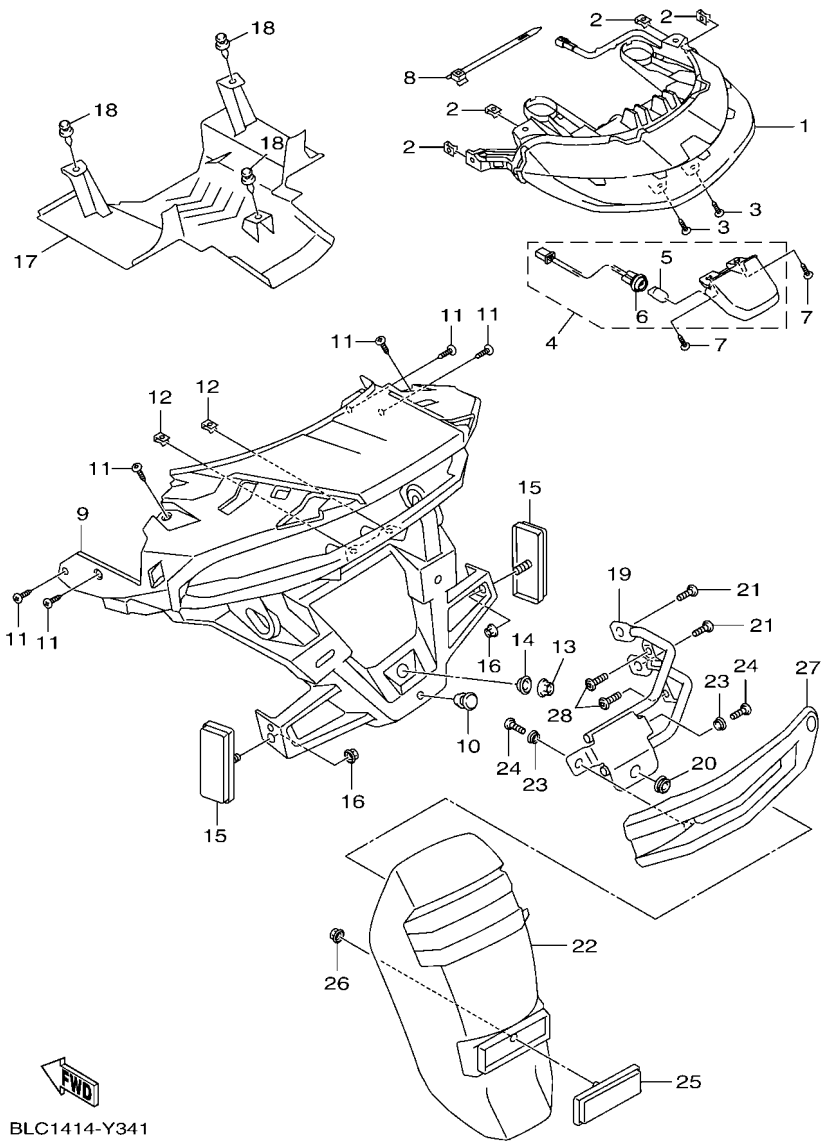

FIG. 34 尾燈

項次	部品番號	部品名稱	BLC2					備註
1	BFV–H4700–10	後燈總成	1					
2	90183–05827	螺絲夾片	4					
3	97702–50016	自攻螺絲	2					
4	BFV–H4745–01	牌照燈組	1					
5	5FM–H4347–00	.燈泡	1					
6	BFV–H4735–01	.燈座總成	1					
7	97707–50012	自攻螺絲	2					
8	90464–22810	固定夾	1					
9	BFV–F1685–10	牌照支架	1					
10	3D1–F163A–00	蓋1	1					
11	97707–50012	自攻螺絲	6					
12	90183–05827	螺絲夾片	2					
13	90179–06833	螺帽	1					
14	90387–06868	軸環	1					
15	BFV–H5111–00	反光片	2					
16	90179–06833	螺帽	2					
17	BFV–F1629–00	擋泥板	1					
18	90269–06806	塑膠螺絲	3					
19	BFV–F1640–00	後固定座	1					
20	90480–12843	橡膠襯套	1					
21	92012–08020	內六角圓頭螺栓	2					
22	BLC–F1612–00	支架	1					
23	90387–06868	軸環	2					
24	90149–06836	螺絲	2					
25	46P–H5130–00	後反光片總成	1					
26	95702–05300	凸緣螺帽	1					
27	BFV–F162R–00	下擋泥蓋2	1					

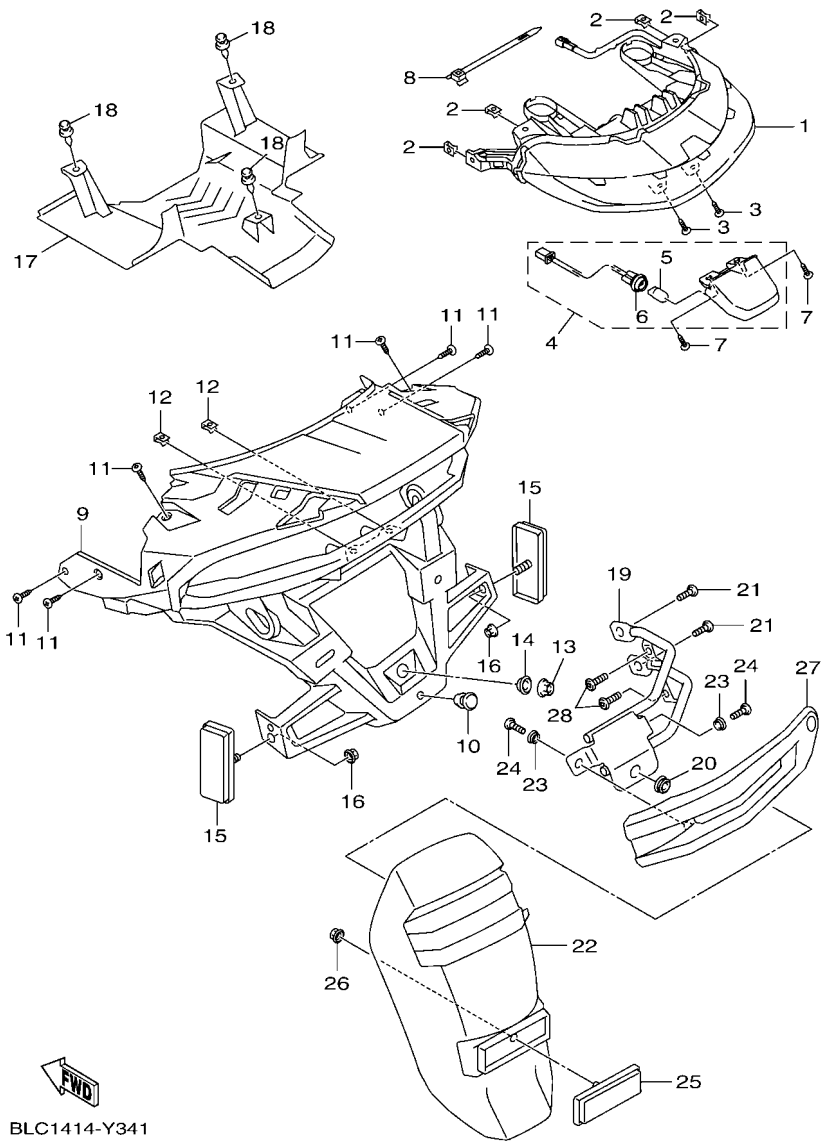

FIG. 34 尾燈

項次	部品番號	部品名稱	BLC2					備註
28	97707–50014	自攻螺絲	2					

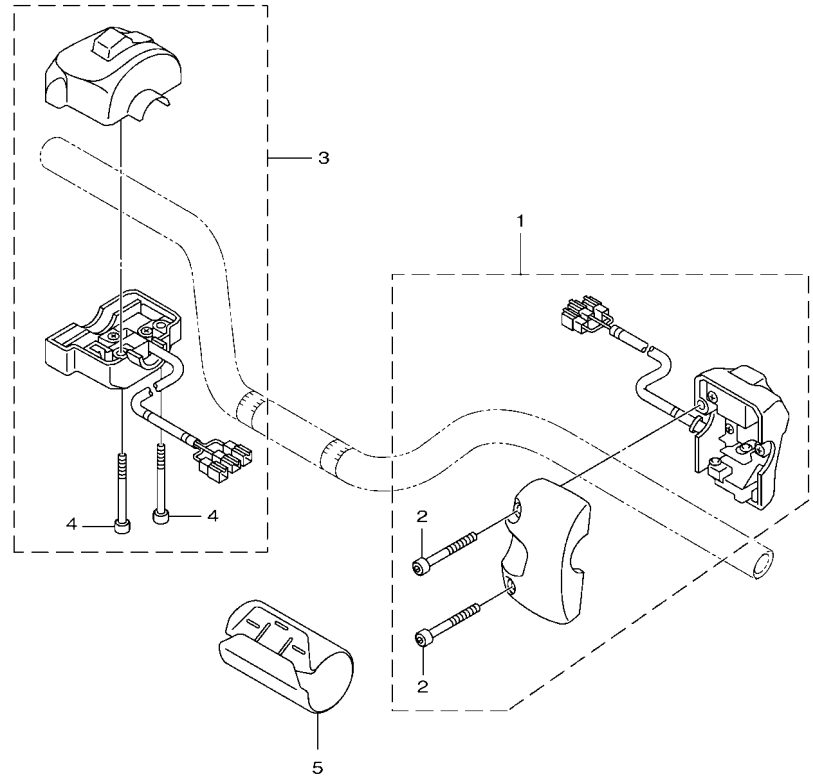

BFV1414-W350

FIG. 35 把手開關,把手

項次	部品番號	部品名稱	BLC2					備註
1	BFV–H3973–00	把手開關 3	1					
2	98507–05030	.盤頭螺絲	2					
3	BLC–H3963–00	把手開關 3	1					
4	98507–05045	.盤頭螺絲	2					
5	2TC–H252U–00	蓋	1					

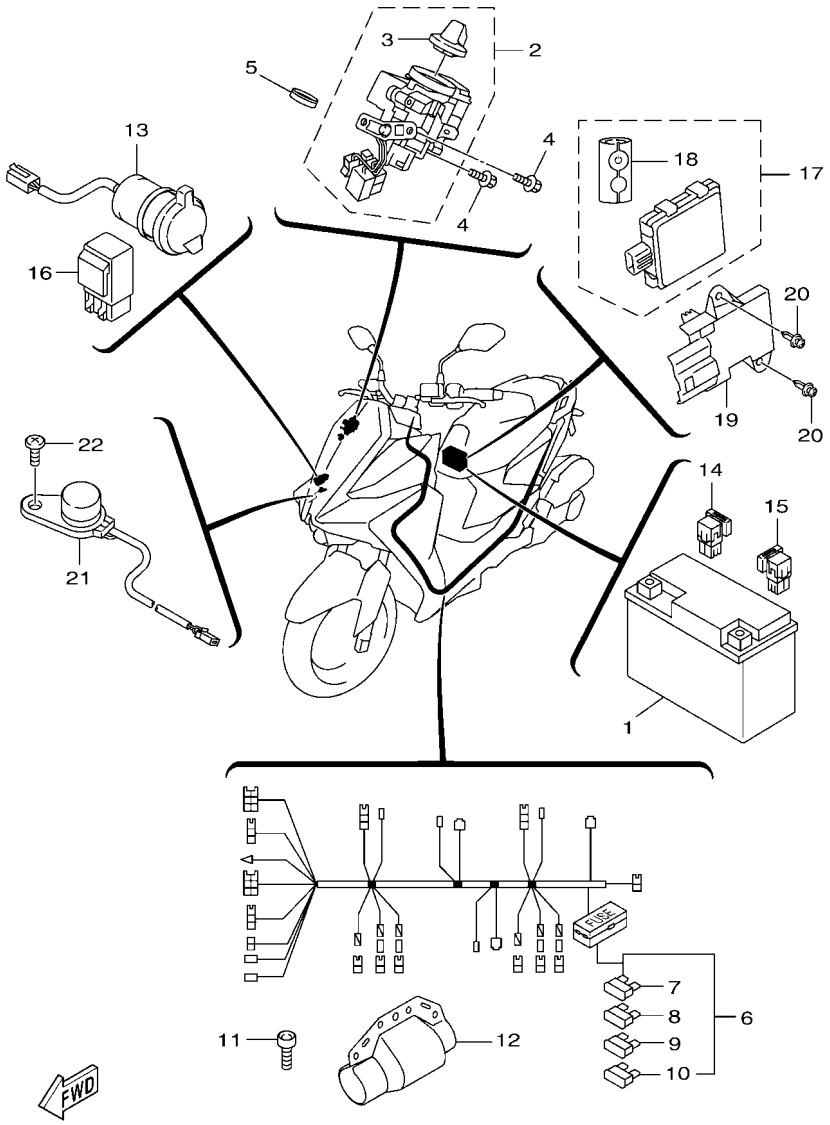

BLC1414-Y361

FIG. 36 電裝 1

項次	部品番號	部品名稱	BLC2					備註
1	2JS–H2100–00	蓄電池總成	1					
2	BLC–WH202–00	鎖整組	1					
3	BLC–H276E–00	.旋鈕	1					
4	91332–06014	內六角螺栓	2					
5	BT5–F1208–00	封圈	1					
6	BLC–H2590–00	電線總成	1					
7	B2J–H2151–10	.保險絲	4					
8	5SU–H2151–10	.保險絲	10					
9	B5T–H2151–00	.保險絲	2					
10	B2J–H2151–30	.保險絲	3					
11	95E32–06012	凸緣螺栓	1					
12	1CG–H252U–00	蓋	1					
13	BLC–H21E0–00	USB插槽	1					
14	BK6–H1950–00	繼電器總成	1					
15	B3F–H1950–10	繼電器總成	1					
16	4HM–81950–21	繼電器總成	1					
17	BJJ–H6260–10	遙控器控制單元	1					
18	B2T–H6261–14	.遙控發送器	1					
19	BLC–F175E–00	內嵌板	1					
20	90269–06802	塑膠螺絲	2					
21	B3F–H3383–00	蜂鳴器	1					
22	97702–50012	攻螺絲	1					

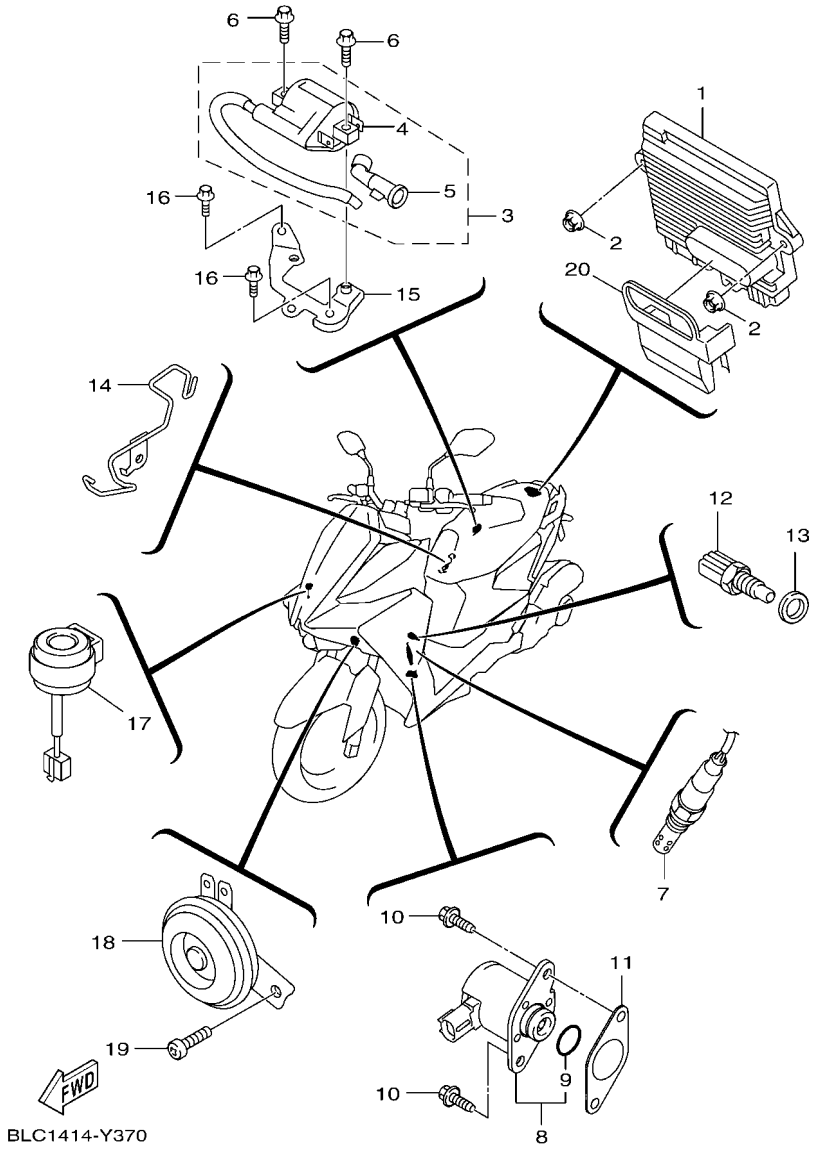

FIG. 37 電裝 3

項次	部品番號	部品名稱	BLC2					備註
1	BLC–H594A–00	發電機控制器	1					
2	95702–06500	凸緣螺帽	2					
3	B8R–H2301–01	點火線圈總成	1					
4	2TS–H2310–00	.點火線圈總成	1					
5	2DP–H2370–10	.火星塞蓋總成	1					
6	90105–068C7	凸緣螺栓	2					
7	B8R–H592A–00	含氧量感知器	1					
8	BK6–H6110–10	電磁閥線圈總成	1					
9	BK6–H1847–00	.護油圈	1					
10	95D32–06016	凸緣螺栓	2					
11	2DP–H1861–00	墊片	1					
12	52B–H3591–00	引擎溫度感知器	1					
13	90430–10806	墊片	1					
14	B8R–E8179–00	支架	1					
15	B8R–E5544–00	固定座	1					
16	90105–068D4	凸緣螺栓	2					
17	3XY–H3390–10	響導警報器總成	1					
18	BFV–H3371–00	喇叭	1					
19	95E37–06012	凸緣螺栓	1					
20	BFV–H2599–00	連結器蓋	1					

FIG. 38 電裝 4

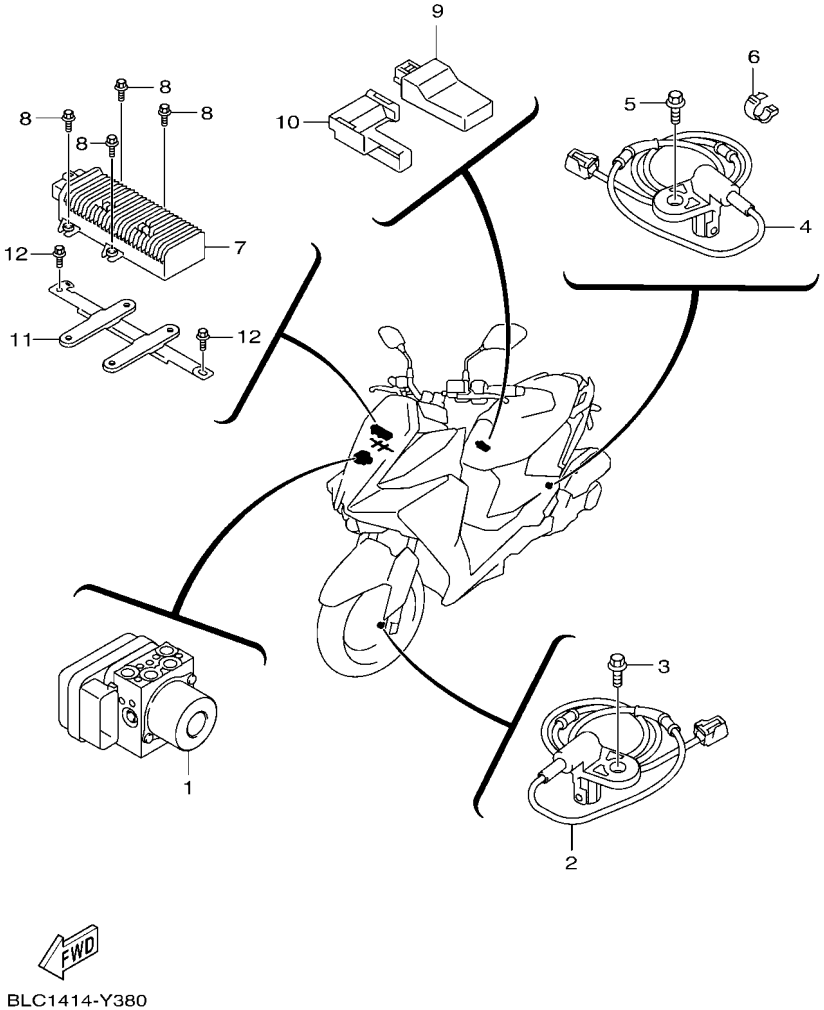

項次	部品番號	部品名稱	BLC2					備註
1	BFV–H5930–09	液壓控制器	1					
2	B8R–H5970–00	前輪速感知器	1					
3	95D37–06016	凸緣螺栓	1					
4	B8R–H5980–00	後輪速感知器	1					
5	95D37–06016	凸緣螺栓	1					
6	90464–14803	固定夾	1					
7	BLC–H5830–00	控制單元總成	1					
8	95807–06014	凸緣螺栓	4					
9	BLC–H5810–00	傳輸控制元件總成	1					
10	BFV–F483H–00	束帶	1					
11	BLC–H4361–00	支架	1					
12	95807–06012	凸緣螺栓	2					

部品番號	項次
5MT–25398–00	21 – 9
	23 – 6
5MT–25398–10	21 – 9
	23 – 6
5MT–25398–20	21 – 9
	23 – 6
4HM–81950–21	36 – 16
B8R–E1102–10	1 – 1
2DP–E111F–00	3 – 18
B8R–E1165–00	1 – 7
B8R–E1166–00	8 – 34
2DP–E1169–00	1 – 8
2DP–E1181–00	1 – 20
B6H–E1185–00	5 – 5
B8R–E1191–00	1 – 6
B3F–E1193–00	1 – 14
2DP–E132G–00	1 – 12
B6H–E1351–00	1 – 25
2DP–E1391–00	1 – 17
2DP–E1392–00	1 – 18
BFV–E1400–00	2 – 1
B63–E1603–00	2 – 6
BK6–E1631–00	2 – 3
2DP–E1633–00	2 – 4
B8R–E2111–00	3 – 1
BB8–E2113–01	3 – 4
2DP–E2117–00	3 – 6
5TL–E2118–00	3 – 5
54P–E2119–00	3 – 3
B8R–E2121–00	3 – 2
52S–E2126–00	3 – 7
2DP–E2150–01	3 – 8
B65–E2156–00	3 – 16
5YP–E2157–01	4 – 6
33S–E2159–01	3 – 9
	3 – 14
B6H–E2160–01	3 – 13
BFV–E2170–00	4 – 1
2PV–E2210–01	4 – 11
B6H–E2213–00	4 – 12
B6H–E2223–00	5 – 3
BB8–E2226–00	3 – 11
1DB–E2228–00	4 – 10
B6H–E2231–00	4 – 8
B6H–E2241–00	4 – 9
2DP–E2279–00	3 – 12
BBP–E2280–10	4 – 4
B6H–E2288–01	4 – 5

部品番號	項次
B63–E22A2–00	6 – 6
B6H–E240A–01	6 – 4
B3F–E2410–01	6 – 1
B6H–E2422–00	5 – 2
B3F–E2439–00	6 – 2
B63–E2439–00	6 – 7
B6H–E2439–00	5 – 4
B6H–E2450–00	5 – 6
B65–E2462–02	6 – 5
B8R–E2467–00	6 – 25
B8R–E2481–00	6 – 17
B8R–E2482–00	6 – 18
B8R–E2483–00	6 – 19
B8R–E2491–00	6 – 20
B8R–E2611–00	6 – 27
5ST–E2615–00	6 – 9
B8R–E2621–00	6 – 21
5ST–E2843–00	6 – 10
B63–E2843–00	6 – 8
B6H–E3300–01	7 – 1
54P–E3411–00	7 – 4
2DP–E3556–00	8 – 12
B6H–E3585–00	8 – 1
B65–E3750–11	8 – 13
2PV–E3761–00	8 – 6
5LW–E3769–00	10 – 15
2PV–E3770–00	8 – 5
B8R–E3907–01	19 – 4
1SH–E3915–00	19 – 5
54P–E3938–00	8 – 9
B8R–E3971–00	19 – 12
54P–E4137–00	8 – 10
B8R–E4146–00	8 – 4
54P–E4147–00	8 – 7
5CA–E4147–00	8 – 8
54P–E416A–00	8 – 18
B6H–E4199–00	8 – 2
54P–E4243–00	8 – 15
54P–E4335–00	8 – 16
BFV–E4410–00	8 – 20
BFV–E4435–00	8 – 30
BCV–E443E–00	11 – 6
BFV–E443E–00	8 – 26
BFV–E443G–00	8 – 27
5TY–E4449–00	8 – 29
BFV–E4451–00	8 – 23
BFV–E4452–00	8 – 24
B63–E4613–00	9 – 7

部品番號	項次
BFV–E4711–10	9 – 1
BFV–E4718–00	9 – 2
B8R–E5150–01	10 – 1
54P–E5351–01	7 – 3
B8R–E5362–00	10 – 14
B8R–E5363–00	10 – 16
B6H–E5371–00	10 – 29
5LW–E5371–01	11 – 5
B6H–E5373–00	10 – 30
2DP–E5407–00	11 – 11
B8R–E5411–00	11 – 1
B8R–E5421–01	10 – 24
B8R–E5423–01	10 – 18
B6H–E5451–00	11 – 2
B6H–E5461–10	10 – 25
B65–E5472–00	11 – 9
2DP–E5474–00	11 – 13
B63–E5481–00	11 – 12
BBJ–E5495–00	11 – 10
B8R–E5544–00	37 – 15
B8R–E6111–00	13 – 9
B8R–E6611–00	12 – 18
BFV–E6620–00	12 – 7
BFV–E6626–00	12 – 8
B8R–E7211–00	13 – 4
B8R–E7410–00	13 – 1
B8R–E7421–00	13 – 3
B8R–E7465–00	12 – 11
B8R–E7465–10	12 – 12
B8R–E7611–00	12 – 6
B8R–E7620–00	12 – 1
B8R–E7623–00	12 – 3
B8R–E7641–00	12 – 19
B8R–E7653–00	12 – 4
B8R–E7664–00	12 – 13
1DK–E7668–00	12 – 17
B8R–E7670–00	12 – 10
B8R–E7674–00	12 – 5
B8R–E7674–10	12 – 14
B8R–E7683–00	12 – 15
B8R–E7684–00	12 – 16
B8R–E8179–00	37 – 14
BLC–F1110–00–33	14 – 1
BFV–F113B–00	14 – 41
B8R–F116M–00	14 – 19
B8R–F116M–10	14 – 28
B8R–F116M–20	14 – 30
B8R–F116M–30	14 – 33

部品番號	項次
5ML–F117G–00	14 – 45
	15 – 21
B8R–F117G–00	14 – 5
BLC–F117K–00	28 – 22
BFV–F118K–00	28 – 46
BT5–F1208–00	36 – 5
B8R–F1415–00	14 – 23
BFV–F1511–00	15 – 1
BFV–F1513–00–P4	15 – 3
BFV–F1514–00–P4	15 – 5
BLC–F151B–00	15 – 17
BFV–F1521–00	15 – 14
BFV–F1552–00	15 – 7
BLC–F1553–00	15 – 15
BFV–F1611–01	15 – 18
BLC–F1612–00	34 – 22
BFV–F1613–00	15 – 22
BFV–F1629–00	34 – 17
BFV–F162R–00	34 – 27
5ML–F1639–00	14 – 39
3D1–F163A–00	34 – 10
BFV–F1640–00	34 – 19
BFV–F1652–00	14 – 43
BFV–F1685–10	34 – 9
BFV–F1711–00	16 – 1
BFV–F171E–00–P3	16 – 9
BLC–F1721–10	16 – 3
BLC–F172A–00	16 – 11
BLC–F172F–00	16 – 15
BLC–F1731–10	16 – 5
BFV–F1741–00–P3	16 – 7
BCC–F175B–00	29 – 11
BLC–F175E–00	36 – 19
5CA–F1815–00	16 – 22
B8R–F1871–00	16 – 19
B8R–F2117–00	17 – 6
B8R–F2141–00	14 – 6
BFV–F2171–00	17 – 1
BLC–F2210–00	17 – 14
4X6–F2216–00	10 – 5
	17 – 2
B8R–F247A–00	16 – 23
B8R–F247B–00	16 – 24
B8R–F247C–00	27 – 14
BFV–F3100–00	18 – 1
BFV–F3102–00	18 – 2
BFV–F3103–00	18 – 20
B8R–F3110–00	18 – 4

部品番號	項次
B8R–F3110–00	18 – 22
4P9–F3113–00	18 – 15
	18 – 33
5P0–F3123–00	18 – 43
B8R–F3126–00	18 – 3
10B–F312G–00	18 – 42
B8R–F3136–00	18 – 21
BFV–F3141–00	18 – 13
	18 – 31
2JS–F3142–00	18 – 5
	18 – 23
4C6–F3145–00	18 – 11
	18 – 29
4C6–F3147–00	18 – 14
	18 – 32
4C6–F3151–00	18 – 7
	18 – 25
4P9–F3154–00	18 – 17
	18 – 35
4P9–F3155–00	18 – 16
	18 – 34
4P9–F3157–00	18 – 12
	18 – 30
4P9–F3158–00	18 – 9
	18 – 27
4P9–F3171–00	18 – 8
	18 – 26
4P9–F3181–00	18 – 10
	18 – 28
4P9–F318X–00	18 – 6
	18 – 24
4P9–F3191–00	18 – 19
	18 – 37
BLC–F319U–00	28 – 11
BLC–F319W–00	28 – 17
B8R–F3317–00	22 – 3
B2J–F331G–00	18 – 18
B2J–F331G–10	18 – 36
B8R–F3340–00	18 – 38
B0J–F3346–00	18 – 41
4FP–F3411–10	18 – 40
4RT–F3411–10	18 – 48
1KL–F3412–10	18 – 44
4RT–F3412–10	18 – 45
41D–F3415–00	18 – 50
4C6–F3416–00	18 – 49
1SK–F3418–00	18 – 53
1P6–F341E–10	18 – 47

部品番號	項次
5VL–F341E–10	18 – 46
1MH–F3441–01–98	25 – 4
5FH–F3442–10–98	25 – 3
BFV–F3461–00	25 – 2
3KW–F3462–00	18 – 39
1MH–F3469–00	25 – 6
B8R–F4110–00–33	19 – 1
B8R–F4135–00	19 – 13
BFV–F413U–00	19 – 33
5D9–F414G–00	19 – 2
1DB–F414G–01	19 – 7
B8R–F419A–00	19 – 14
BFV–F4280–00	19 – 22
B8R–F4316–00	19 – 17
B8R–F4317–00	19 – 19
BFV–F4318–00	19 – 27
B8R–F4491–00	19 – 8
B8R–F4491–10	19 – 10
BLC–F4494–00	19 – 32
B8R–F4610–00	19 – 29
BLC–F464G–00	28 – 23
BLC–F4652–09–A0	28 – 21
BLC–F4652–09–B0	28 – 21
B5D–F465B–00	28 – 19
BLC–F465E–00	28 – 20
BFV–F467E–00	19 – 31
4C6–F4723–00	14 – 44
4CW–F4726–01	20 – 3
BLC–F4730–10	20 – 1
BFV–F473R–00	20 – 6
1P3–F4747–01	14 – 27
BFV–F474A–00–P0	20 – 11
BFV–F474W–00–P0	20 – 16
BFV–F475M–00	20 – 2
2TS–F4768–00	20 – 23
BKB–F476G–00	20 – 29
BLC–F4780–00	20 – 21
BLC–F478E–00	20 – 24
BLC–F479D–00	20 – 25
BFV–F483H–00	38 – 10
1MS–F5139–00	24 – 12
2JS–F5139–00	22 – 13
BFV–F5168–00–P3	21 – 1
1DK–F517G–00	21 – 5
	23 – 4
4VP–F5181–10	21 – 12
BFV–F518A–00	21 – 10
BFV–F5338–00–P3	23 – 1

部品番號	項次
B8R–F5522–10	26 – 47
BFV–F580U–00	22 – 4
B8R–F580W–00	24 – 3
B8R–F581J–00	26 – 42
BFV–F582U–00	22 – 1
B8R–F582W–00	24 – 1
5AG–F5845–00	24 – 13
BFV–F5852–00	26 – 5
BFV–F5852–10	26 – 18
BFV–F5854–00	26 – 3
BFV–F5854–10	26 – 16
BFV–F5855–00	26 – 4
BFV–F5855–10	26 – 17
BFV–F5867–00	26 – 25
BFV–F5867–10	26 – 12
BFV–F5870–00	26 – 1
BFV–F5870–10	26 – 14
BFV–F5872–00	26 – 27
BFV–F5873–00	26 – 39
B8R–F5874–00	26 – 30
BLC–F5875–00	18 – 54
BLC–F5875–10	18 – 55
B8R–F5876–00	18 – 57
B8R–F5876–10	18 – 58
B8R–F587A–00	26 – 36
B8R–F587A–10	26 – 37
BFV–F5886–00	26 – 34
B8R–F588F–00	26 – 49
B8R–F588F–10	26 – 50
B8R–F588G–00	17 – 11
2JS–F5914–00	22 – 14
1DK–F5919–00	24 – 10
1MS–F5919–00	22 – 12
1DK–F5919–10	24 – 11
1MS–F5919–10	22 – 11
1DK–F5924–00	24 – 14
5ML–F5927–00	22 – 9
	24 – 8
5ML–F5937–00	22 – 10
	24 – 9
BFV–F6111–00	25 – 1
1DK–F6124–00	25 – 12
BFV–F6133–01	20 – 12
BFV–F6134–01	20 – 17
BFV–F6143–00	29 – 1
3GF–F6199–00	20 – 9
BFV–F6240–01	25 – 14
BFV–F6241–01	25 – 13

部品番號	項次
B8R–F6246–00	25 – 15
1SH–F6257–01	27 – 10
B8R–F627E–00	25 – 18
BFV–F6280–00	29 – 3
BFV–F6290–00	29 – 7
5FA–F6294–00	29 – 4
	29 – 8
5FA–F629T–00	29 – 6
	29 – 10
BLC–F6301–00	25 – 16
5FA–F6356–01	29 – 9
BLC–F635H–00	28 – 33
BLC–F635J–00	28 – 38
5FA–F6386–01	29 – 5
2BM–F7112–00	27 – 11
5P1–F7114–00	14 – 10
BFV–F7114–00	14 – 47
1SH–F7121–00	10 – 3
5ML–F7254–00	27 – 15
BCC–F7285–00	27 – 8
BFV–F7311–00	27 – 16
1DK–F7431–20	27 – 20
1DK–F7441–20	27 – 21
BFV–F7452–00	14 – 48
BFV–F7462–00	14 – 50
BLC–F7475–00	28 – 34
BLC–F7476–00	28 – 39
BFV–F7481–00	27 – 1
BFV–F7482–00	16 – 30
BFV–F7486–00	27 – 6
BFV–F7487–00	27 – 7
BFV–F7492–00	16 – 33
B8R–F8135–00	20 – 28
B8R–F8216–00	17 – 7
BFV–F8257–00	28 – 40
BLC–F8300–00	28 – 18
BKB–F8308–00	16 – 36
BLC–F8311–40	28 – 1
BLC–F8336–00	28 – 5
BLC–F8349–00	28 – 10
BLC–F834J–00	28 – 16
BLC–F8351–00–P3	28 – 42
B8R–F8356–00	14 – 14
BLC–F8357–00	14 – 35
BFV–F8358–00	14 – 21
5ML–F836U–00	14 – 46
BLC–F8377–00–P3	28 – 44
BLC–F8396–00	28 – 6

部品番號	項次
BLC–F8397–00	28 – 12
BLC–F839K–00	28 – 30
BLC–F839L–00	28 – 35
BFV–F845W–00	28 – 26
BFV–F845X–00	28 – 27
B8R–H1410–00	30 – 2
B6H–H1450–00	30 – 1
BK6–H1847–00	37 – 9
2DP–H1861–00	37 – 11
BK6–H1950–00	36 – 14
B3F–H1950–10	36 – 15
2JS–H2100–00	36 – 1
BFV–H2129–00	20 – 26
B5T–H2151–00	36 – 9
5SU–H2151–10	36 – 8
B2J–H2151–10	36 – 7
B2J–H2151–30	36 – 10
BLC–H21E0–00	36 – 13
B8R–H2301–01	37 – 3
2TS–H2310–00	37 – 4
2DP–H2370–10	37 – 5
1CG–H252U–00	36 – 12
2TC–H252U–00	35 – 5
2DP–H2530–01	26 – 23
BLC–H2590–00	36 – 6
BFV–H2599–00	37 – 20
BLC–H276E–00	36 – 3
B1X–H330A–10	31 – 5
B1X–H330B–00	31 – 6
BLC–H3310–00	31 – 2
BLC–H3320–00	31 – 3
BFV–H3371–00	37 – 18
B3F–H3383–00	36 – 21
3XY–H3390–10	37 – 17
BLC–H3510–00	32 – 1
BLC–H3559–00	32 – 4
52B–H3591–00	37 – 12
BFV–H3912–00	26 – 20
BFV–H3922–00	26 – 7
41D–H3945–00	26 – 8
	26 – 21
BLC–H3963–00	35 – 3
BFV–H3973–00	35 – 1
2DP–H3980–01	26 – 10
BLC–H4300–01	33 – 1
5FM–H4347–00	34 – 5
BLC–H4361–00	38 – 11
BFV–H4385–00	20 – 13

部品番號	項次
BFV–H4386–00	20 – 18
BLC–H4410–00	31 – 1
BFV–H4700–10	34 – 1
BFV–H4735–01	34 – 6
BFV–H4745–01	34 – 4
BFV–H5111–00	34 – 15
46P–H5130–00	34 – 25
B8R–H5752–01	19 – 6
B63–H5801–01	8 – 17
BLC–H5810–00	38 – 9
BLC–H5830–00	38 – 7
B8R–H592A–00	37 – 7
BFV–H5930–09	38 – 1
BLC–H594A–00	37 – 1
B8R–H5970–00	38 – 2
B8R–H5980–00	38 – 4
BK6–H6110–10	37 – 8
BJJ–H6260–10	36 – 17
B2T–H6261–14	36 – 18
B8R–W0041–00	26 – 2
	26 – 15
BFV–W0045–00	22 – 8
2JS–W0046–30	24 – 7
5NW–W0047–00	22 – 6
5S9–W0047–00	24 – 5
1MS–W0048–00	24 – 6
2JS–W0048–20	22 – 7
B0J–W0054–10	18 – 60
5NW–W0057–00	22 – 5
1DK–W0057–10	24 – 4
B6H–WE242–01	5 – 1
BFV–WE441–00	8 – 21
BFV–WE442–00	8 – 22
BFV–WE763–00	12 – 2
B8R–WE766–00	12 – 9
BLC–WH202–00	36 – 2
B8R–XE543–00	11 – 8
B8R–XF141–00	14 – 2
BFV–XF711–00	27 – 9
B6H–Y1310–10	1 – 24
90101–10875	17 – 16
90105–068C7	37 – 6
90105–068D4	37 – 16
90105–088E3	14 – 12
90105–088F1	17 – 15
90105–10283	14 – 8
90105–10638	22 – 15
	24 – 15

部品番號	項次
90105–10864	25 – 9
90109–06086	16 – 20
90109–06885	20 – 8
	27 – 2
90109–068D3	15 – 4
	15 – 6
90109–08087	22 – 2
	24 – 2
90109–10005	27 – 17
90110–06846	8 – 19
90110–06880	30 – 3
90110–06894	1 – 23
90111–06801	9 – 6
90111–06854	28 – 41
90111–06884	15 – 16
90116–08806	1 – 5
90119–06821	16 – 12
	16 – 16
	33 – 5
90119–06864	19 – 23
90119–068B4	19 – 3
90119–068D9	20 – 14
	20 – 19
90119–068E1	20 – 15
	20 – 20
90149–05030	21 – 6
	23 – 5
90149–05801	1 – 9
90149–06836	34 – 24
90155–04800	19 – 30
90159–05802	29 – 2
90159–05806	16 – 21
90159–05807	16 – 32
	16 – 35
90169–05001	28 – 9
	28 – 15
90170–05803	3 – 10
	3 – 15
90170–08811	1 – 15
90170–12803	12 – 23
90179–05003	14 – 38
90179–05849	16 – 14
	16 – 18
90179–06833	14 – 37
	34 – 13
	34 – 16
90179–12004	12 – 22
	30 – 5

部品番號	項次
90179–25811	18 – 51
90183–05801	15 – 2
90183–05803	15 – 9
	27 – 5
90183–05827	15 – 8
	16 – 8
	16 – 10
	27 – 4
	28 – 7
	28 – 13
	28 – 28
	28 – 43
	28 – 45
	34 – 2
	34 – 12
90183–06813	27 – 3
	28 – 3
	28 – 24
	33 – 6
90185–10110	27 – 18
90185–10814	25 – 7
	25 – 10
90185–16800	23 – 7
90201–06057	9 – 5
90201–08823	25 – 8
90201–08859	1 – 16
90201–10118	26 – 29
	26 – 33
	26 – 41
	26 – 46
90201–101J1	17 – 17
90201–12688	30 – 4
90201–15845	12 – 27
90201–15849	12 – 21
90201–16819	12 – 20
90202–26142	18 – 52
90241–10015	20 – 5
90269–06802	36 – 20
90269–06803	15 – 13
	20 – 27
	28 – 32
	28 – 37
90269–06806	34 – 18
90280–03017	2 – 2
90340–12813	1 – 2
90340–12816	10 – 10
90380–10800	12 – 25
90387–067N5	33 – 4

部品番號	項次
90387–06868	15 – 11
	15 – 20
	34 – 14
	34 – 23
90387–06870	9 – 4
90387–068N8	14 – 17
90387–07598	19 – 24
90387–08821	14 – 11
90387–08823	6 – 11
90387–10824	21 – 13
90387–10839	21 – 2
90387–10855	14 – 4
90387–17807	17 – 5
90387–17808	17 – 9
90388–10808	10 – 4
90388–10818	14 – 3
90401–10805	26 – 28
	26 – 31
	26 – 32
	26 – 40
	26 – 44
	26 – 45
90430–06014	1 – 4
	1 – 27
90430–06803	5 – 10
90430–08804	10 – 13
90430–10806	37 – 13
90430–12803	10 – 11
90450–43805	8 – 33
90450–55803	19 – 18
90464–10800	15 – 10
	16 – 27
90464–14803	38 – 6
90464–16802	25 – 11
90464–16803	14 – 25
	16 – 28
	17 – 13
	19 – 15
	26 – 43
90464–17803	26 – 52
90464–22810	14 – 26
	16 – 29
	34 – 8
90467–08003	16 – 26
90467–090A2	16 – 25
90467–10008	10 – 31
90467–11106	11 – 7
90467–11825	8 – 35

部品番號	項次
90467–11825	10 – 32
90467–12052	8 – 36
	19 – 28
90467–12806	8 – 28
90467–14806	19 – 21
90467–18185	19 – 20
90467–19803	6 – 15
	6 – 16
90467–20806	6 – 14
90480–01326	19 – 26
90480–12809	9 – 3
90480–12843	34 – 20
90480–13398	33 – 3
90480–14229	14 – 16
90480–14833	6 – 12
90480–17802	14 – 36
90480–18290	19 – 25
90501–16004	7 – 5
90506–26815	27 – 19
90506–35829	27 – 13
90520–02821	14 – 40
	20 – 10
90520–02834	14 – 42
	28 – 4
90520–06806	20 – 7
90520–10853	6 – 22
90520–10855	6 – 23
90520–15816	8 – 32
91312–05010	19 – 9
	25 – 17
91312–05016	3 – 17
91317–05014	25 – 19
91317–08025	25 – 5
91332–06014	36 – 4
91332–06025	8 – 3
91810–14807	1 – 21
	1 – 22
	10 – 6
	10 – 21
	10 – 26
	11 – 3
92012–05025	28 – 31
	28 – 36
92012–08014	14 – 29
	14 – 31
	14 – 34
	14 – 49
	14 – 51

部品番號	項次
92012–08020	14 – 32
	27 – 22
	34 – 21
92017–05016	16 – 4
	16 – 6
93102–08800	1 – 13
93102–20815	13 – 11
93102–22829	10 – 9
93102–24802	10 – 19
93102–32807	13 – 8
93106–20808	21 – 3
93109–28811	17 – 3
93210–09806	4 – 2
93210–14816	10 – 17
93210–19809	5 – 15
93210–29800	7 – 6
93210–39803	5 – 12
93211–28800	10 – 20
93300–608X0	5 – 8
93306–001YM	4 – 3
93306–254Y9	13 – 10
93306–255YA	13 – 7
93306–300Y4	21 – 4
93306–302YW	13 – 2
93306–303XC	13 – 6
93306–303YG	17 – 4
93306–351Y8	13 – 12
933A6–202Y8	12 – 24
93450–16115	2 – 5
93900–00836	21 – 8
	23 – 3
94112–13802	21 – 7
94113–13808	23 – 2
94568–A8096	4 – 7
94700–00415	1 – 19
95027–06020	5 – 9
95027–06030	26 – 13
	26 – 26
95307–10800	17 – 18
95602–08200	14 – 13
95602–10200	14 – 7
	14 – 9
95607–06100	26 – 9
	26 – 22
95607–10200	21 – 11
95702–05300	34 – 26
95702–06500	14 – 24
	15 – 12

部品番號	項次
95702–06500	26 – 35
	33 – 2
	37 – 2
95702–08500	9 – 8
95707–06500	20 – 4
95802–06010	19 – 11
95807–06012	32 – 2
	38 – 12
95807–06014	38 – 8
95D02–06012	14 – 22
	18 – 56
	26 – 38
95D02–06014	14 – 20
95D07–06012	26 – 48
95D07–06014	18 – 59
95D07–06016	15 – 19
	15 – 23
95D32–06016	6 – 28
	37 – 10
95D32–06030	6 – 13
	8 – 11
	8 – 31
95D32–08045	10 – 12
95D32–10045	9 – 9
95D32–10060	9 – 10
	17 – 10
95D37–06016	17 – 8
	17 – 12
	38 – 3
	38 – 5
95D37–06020	14 – 18
	28 – 25
95D37–08014	14 – 15
95E32–06010	1 – 3
	1 – 26
95E32–06012	19 – 16
	20 – 22
	26 – 51
	36 – 11
95E32–06014	3 – 19
95E32–06020	4 – 13
	6 – 3
	6 – 26
	10 – 22
95E32–06025	5 – 13
95E32–06030	1 – 10
	10 – 23
95E32–06035	11 – 4

部品番號	項次
95E32–06045	5 – 14
95E32–06050	6 – 24
95E32–06060	10 – 7
95E32–06110	10 – 8
95E32–08035	10 – 28
95E32–08045	10 – 27
95E37–06012	37 – 19
97602–04214	26 – 11
	26 – 24
97702–50012	36 – 22
97702–50016	31 – 4
	32 – 3
	34 – 3
97707–50012	16 – 13
	16 – 17
	28 – 2
	34 – 7
	34 – 11
97707–50014	34 – 28
97707–50016	16 – 2
	16 – 31
	16 – 34
	28 – 8
	28 – 14
	28 – 29
97707–50025	8 – 25
98502–05020	7 – 2
98502–06012	8 – 14
98507–05030	35 – 2
98507–05045	35 – 4
98707–04012	26 – 6
	26 – 19
99002–09600	27 – 12
99009–08400	5 – 7
99009–25400	13 – 5
99009–35700	12 – 26
99480–03012	10 – 2
99530–08012	1 – 11
	5 – 11

部品番號	項次