COLOR & STRIPE SET FOR WOLF 250 EF

NO			
	YEARS		
	MODEL		WHITE
	BASIC COLOR		WH-300P
	CODE		W

Item	Parts Number	Description	Basic Color	Code
1	1751G-BAA-000	FUEL TANK ASSY	WH-300P	QU
1	17510-B9A-010	FUEL TANK COMP		
1-1	17511-BAA-000	FUEL TANK STRIPE		●
1-2	17515-B9A-000	FUEL TANK PROTECTOR		●
1-3	87121-A5W-000	SYM MARK (90 STRIPE) TYPE		T3
1-4	87123-B9D-000	S LOGO STRIPE (40 MM)		●
2	37210-B9A-000	SPEEDOMETER CASE	GY-7450U	IL
3	42601-B7A-100	RR.CASTING WHEEL COMP	GY-7520U	IT
4	4261A-BAA-000	FINAL DRIVEN ASSY	GY-7520U	IT
5	44601-B9A-100	FR CASTING WHEEL COMP	GY-7520U	IT
6	5035A-BAA-000	ENG HANGER LINK ASSY	GY-7520U	IT
7	50530-BAA-000	SIDE STAND BAR COMP	GY-7520U	IT
8	50617-B9A-000	L STEP HOLDER	GY-429U	IS
9	5061D-BAA-000	R STEP HOLDER COMP	GY-429U	IS
10	5210A-BAA-000	RR.FORK ASSY	GY-7450U	IL
11	52400-BAA-000	RR.CUSHION ASSY	WT-462	QQ
12	53100-BAA-000	STEERING HANDLE PIPE	GY-429U	IS
13	53104-BAA-000	HANDLE PIPE WT ASSY	GY-7450U	IL
14	53131-BAA-010	HNDL. PIPE UPPER HOLDER	S-877U	OE
15	53205-B9A-000	FR.HANDLE COVER	GY-7450U	IL
16	53207-B9A-000	METER VISOR A	WH-300P	H1QU
17	53210-BAA-000	STEM NUT COVER	S-877U	OE
18	53231-B9A-000	FORK TOP BRIDGE	GY-7450U	IL
19	61100-B9A-000	FR FENDER	WH-300P	QU
20	64301-BAA-000	R FR COVER	WH-300P	QU1
21	64310-BAA-000	R UNDER SPOILER	WH-300P	QU
22	64401-BAA-000	L FR COVER	WH-300P	QU1
23	64410-BAA-000	L UNDER SPOILER	WH-300P	QU
24	81300-B9A-000	RR CARRIER	WH-300P	QU
25	8350A-B9A-000	R FR BODY COVER ASSY	GY-7450U	IL
25-1	87127-B7A-900	FR BODY COVER STRIPE		●
26	8360A-B9A-000	L FR BODY COVER ASSY	GY-7450U	IL
26-1	87127-B7A-900	FR BODY COVER STRIPE		●
27	8366A-BAC-000	R RR BODY COVER ASSY	WH-300P	QU2
27-1	87128-BAC-000	RR.BODY COVER STRIPE		●
28	8367A-BAC-000	L RR BODY COVER ASSY	WH-300P	QU2
28-1	87128-BAC-000	RR.BODY COVER STRIPE		●

STRIPE

Pictures reference only

1-1	1-2	1-3(T2)	1-3(T3)
1-4	25-1/26-1	27-1/28-1	

CONTENTS—ENGINE GROUP

E01 CYL.HEAD COVER ASSY	E02 CYLINDER HEAD ASSY	E03 CYLINDER SET
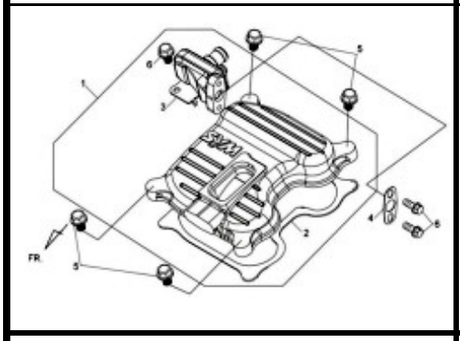	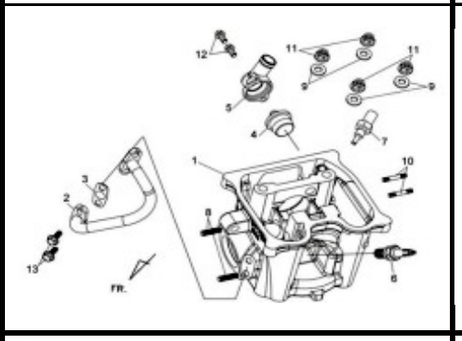	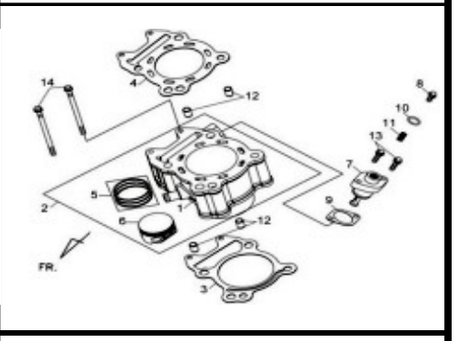
E04 CYL.HEAD SIDE COVER ASSY	E05 IN/EXH.VALVE	E06 CAM SHAFT COMP
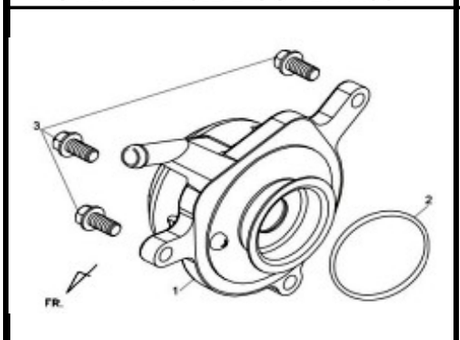	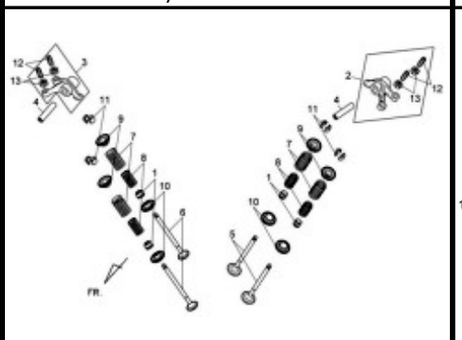	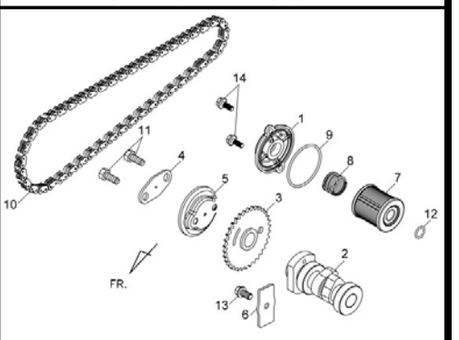
E07 L.CRANK CASE COVER	E08 AC.GEN ASSY	E09 R.CRANK CASE COVER
	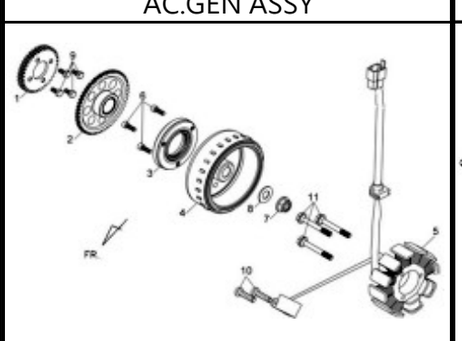	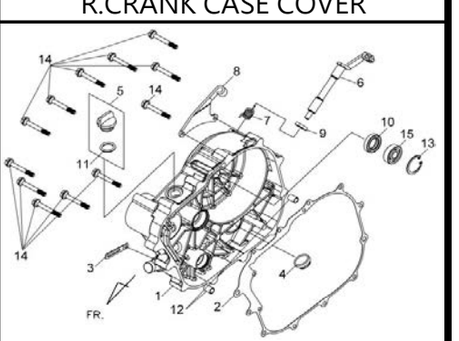
E10 OIL PUMP ASSY	E11 CLUTCH CENTER ASSY	E12 CRANK SHAFT COMP
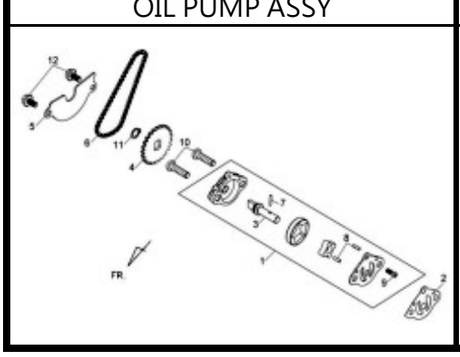	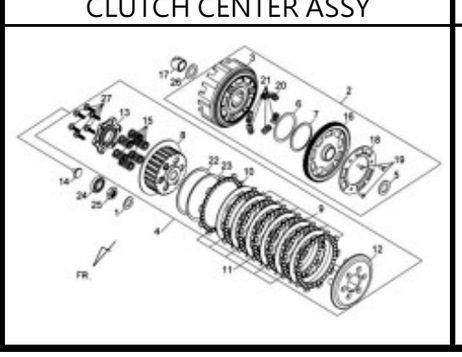	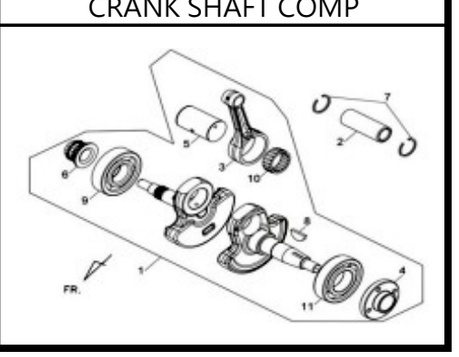

CONTENTS—ENGINE GROUP

E13 GEAR SHIFT SPINDLE ASSY	E14 MAIN SHAFT ASSY	E15 COUNTER SHAFT ASSY
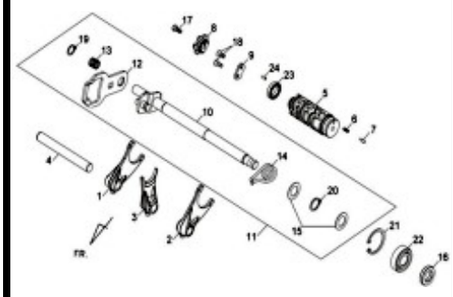	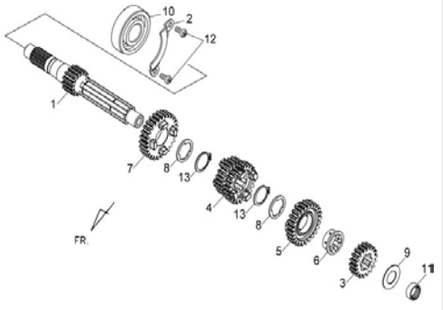	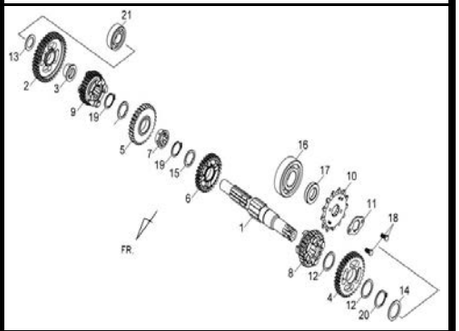
E16 BALANCE SHAFT DRIVE GEAR	E17 R.CRANK CASE COMP	E18 L.CRANK CASE COMP
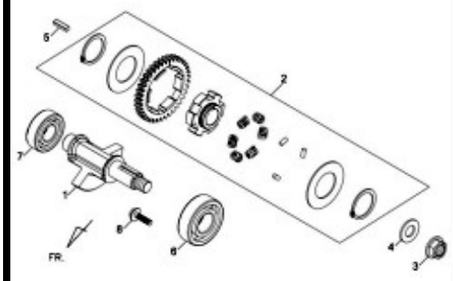	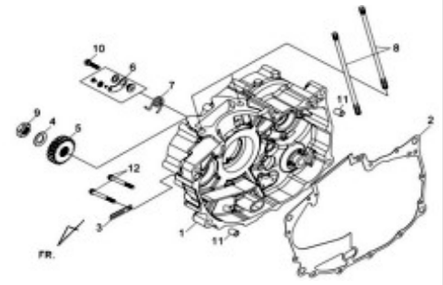	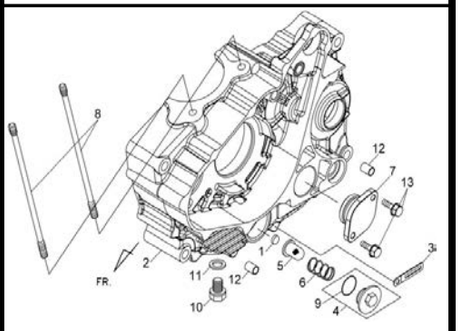
E19 IN PIPE&THROTTLE BODY ASSY	E20 START.MOTOR&START GEAR	E21 WATER PUMP COVER ASSY
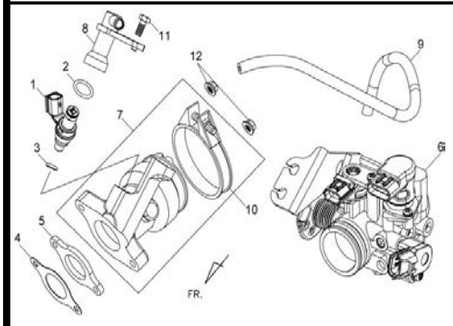	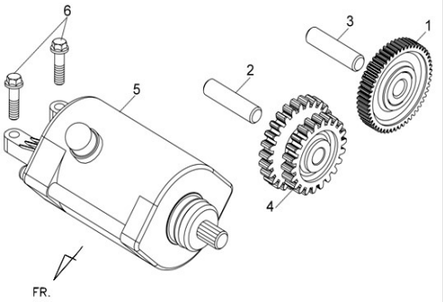	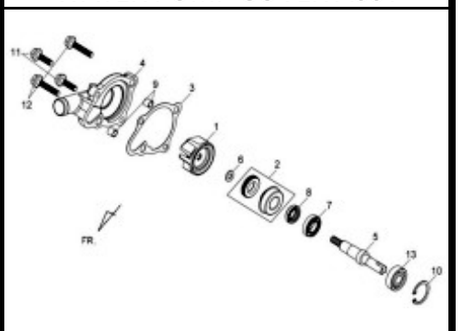

CONTENTS—FRAME C

F01
FR.HANDLE COVER

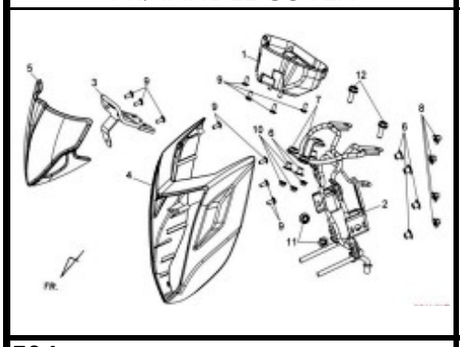

F02
SPEEDOMETER ASSY

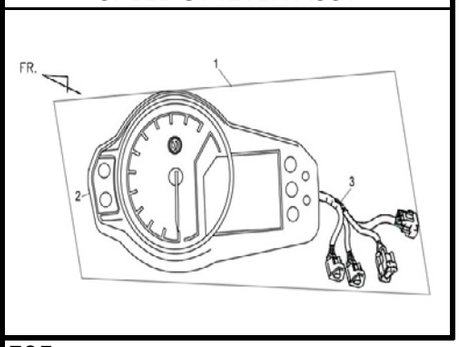

F04
FR.BRAKE ASSY

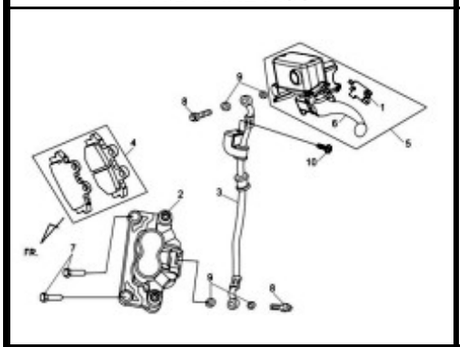

F05
RR.BRAKE ASSY

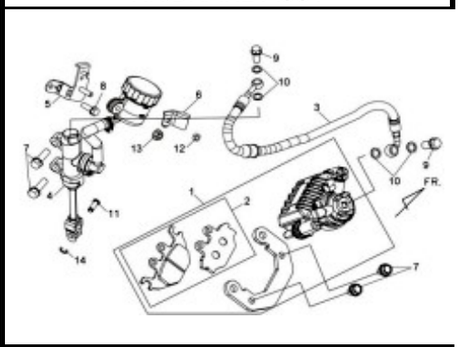

F07
STRG.STEM COMP

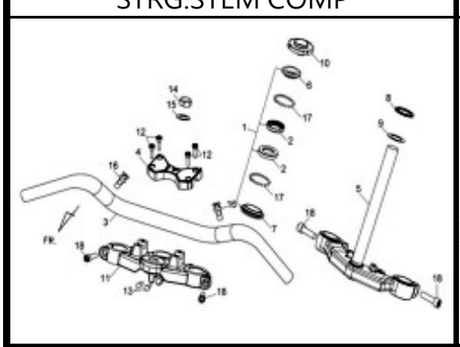

F08
L/R.HANDLE SW ASSY

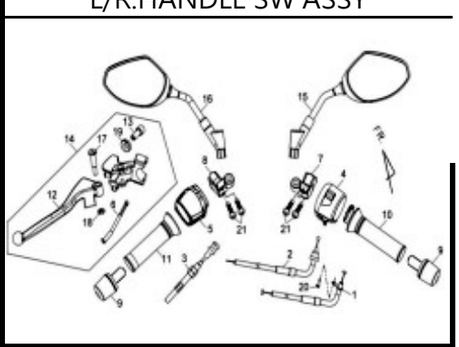

F10
FR.FENDER SET

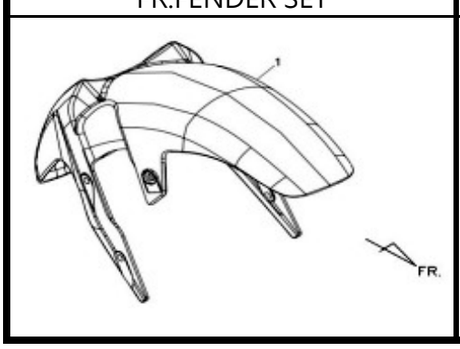

F11
RESERVE TANK ASSY

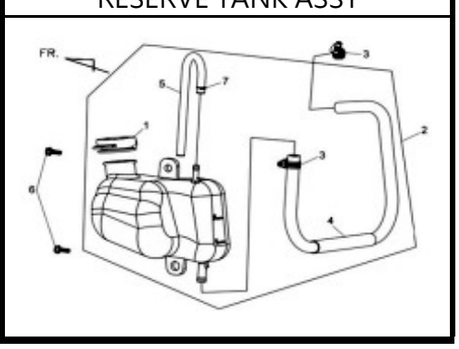

GROUP

F03

HEAD LIGHT&FR.WINKER ASSY

F06

FR.CUSHION SET

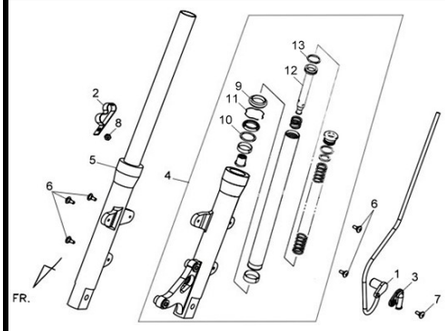

F09

FR COVER ASSY

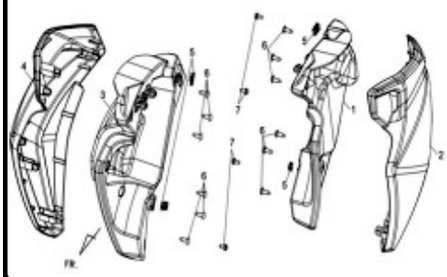

F12

GEAR CHANGE ASSY

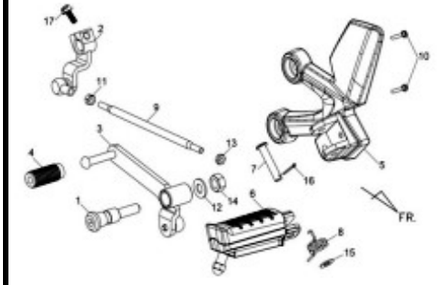

CONTENTS—FRAME C

F13
BRAKE PEDAL ASSY

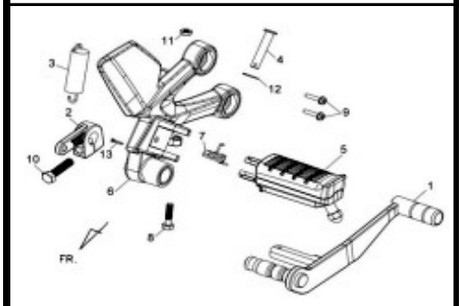

F14
UNDER SPOILER ASSY

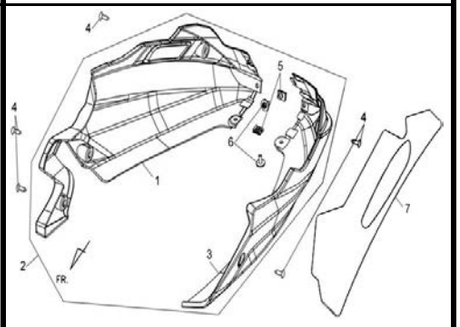

F16
BODY COVER ASSY

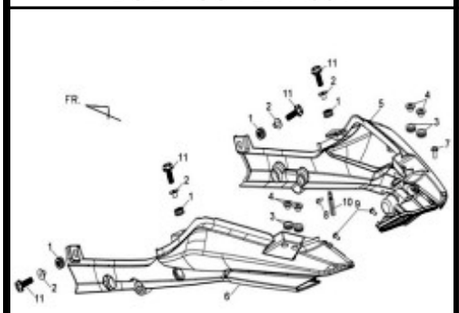

F17
RR.FENDER

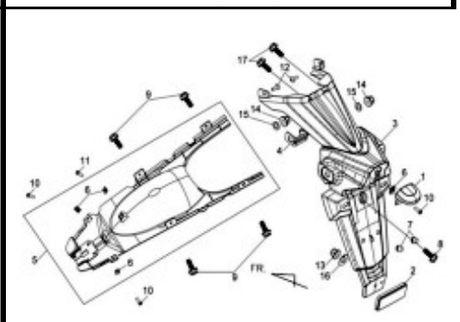

F19
FUEL TANK COMP

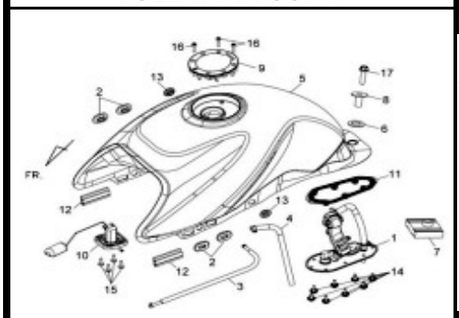

F20
RADIATOR COMP ASSY

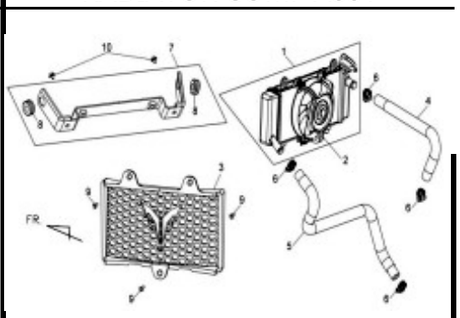

F22
L/R.PILLION STEP ASSY

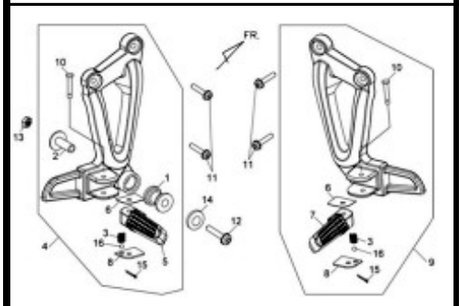

F23
RR.CUSHION ASSY

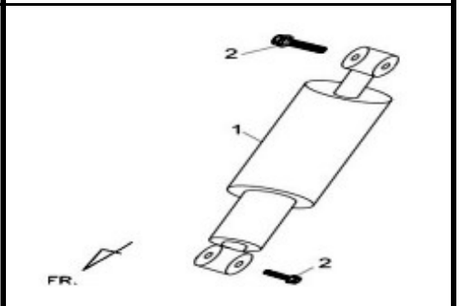

GROUP

F15

TAIL LIGHT&RR.WINKER ASSY

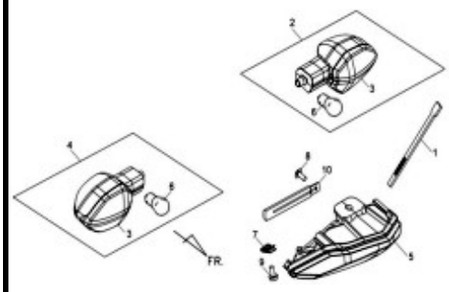

F18

DOUBLE SEAT&RR CARRIER

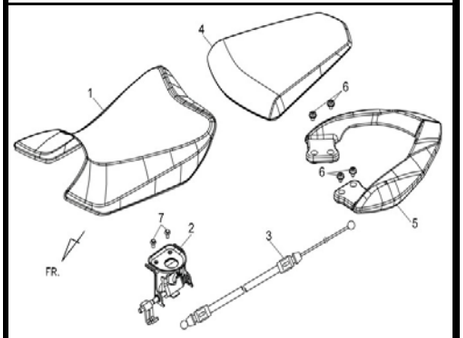

F21

FRAME BODY COMP

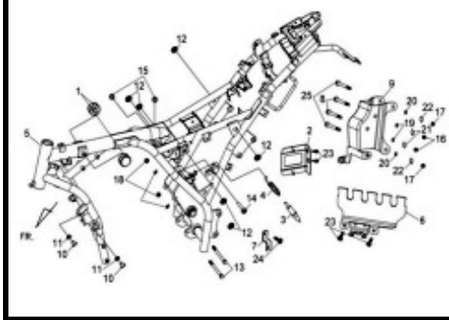

F24

L.COVER DUCT&BATTERY CASE

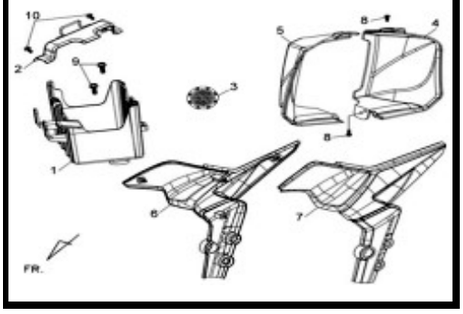

CONTENTS—FRAME C

F25
A.I.S.V.UNIT

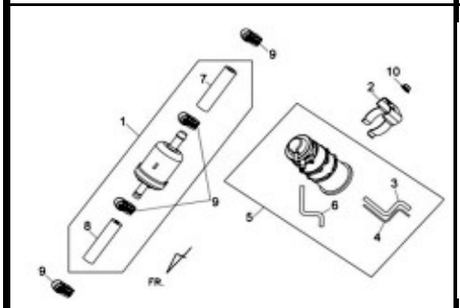

F26
SIDE STAND COMP

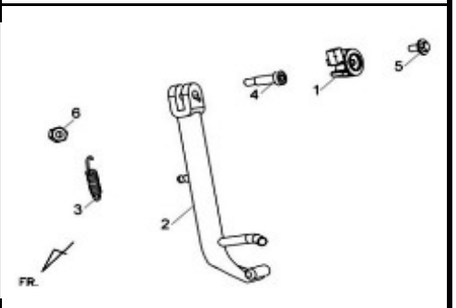

F28
RR.WHEEL

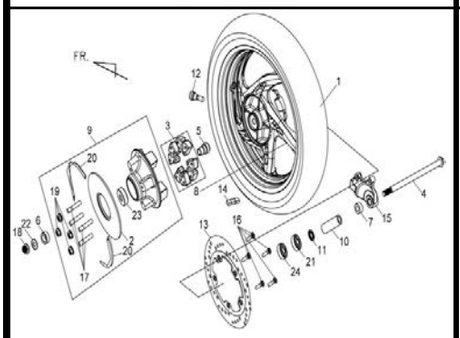

F29
RR.FORK ASSY

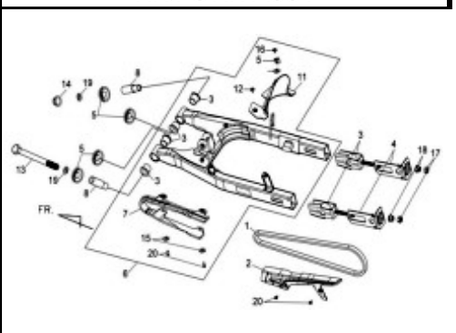

F31
WIRE HARNESS

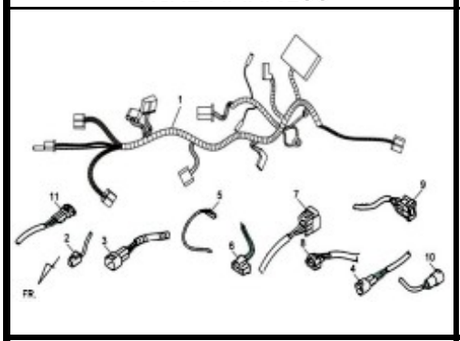

F32
AIR CLEANER ASSY

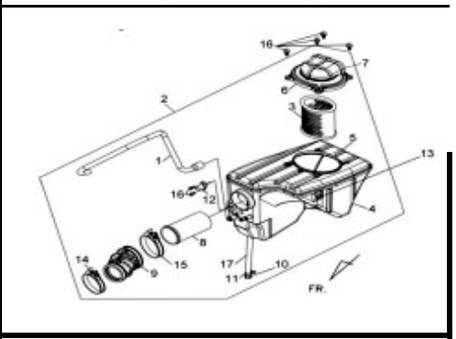

GROUP

F27

FR.WHEEL

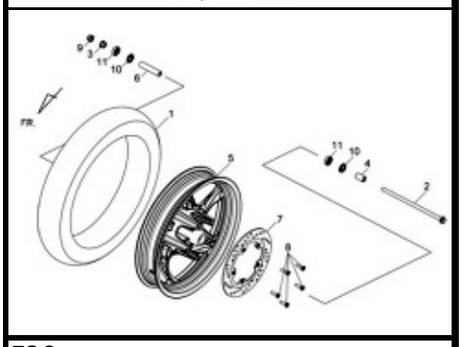

F30

ELECTRICAL PARTS

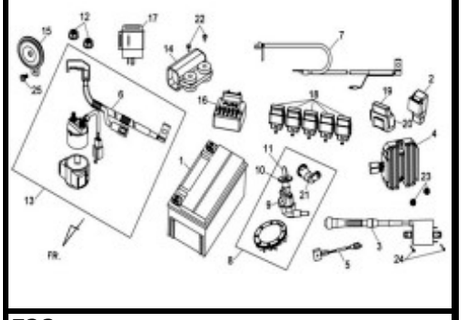

F33

EXH.MUFFLER ASSY

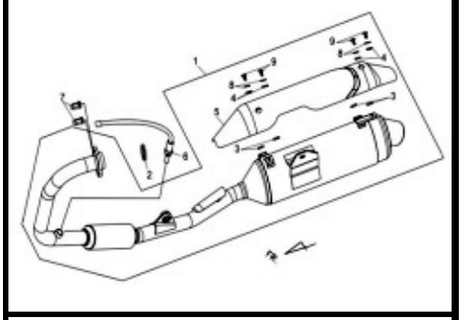

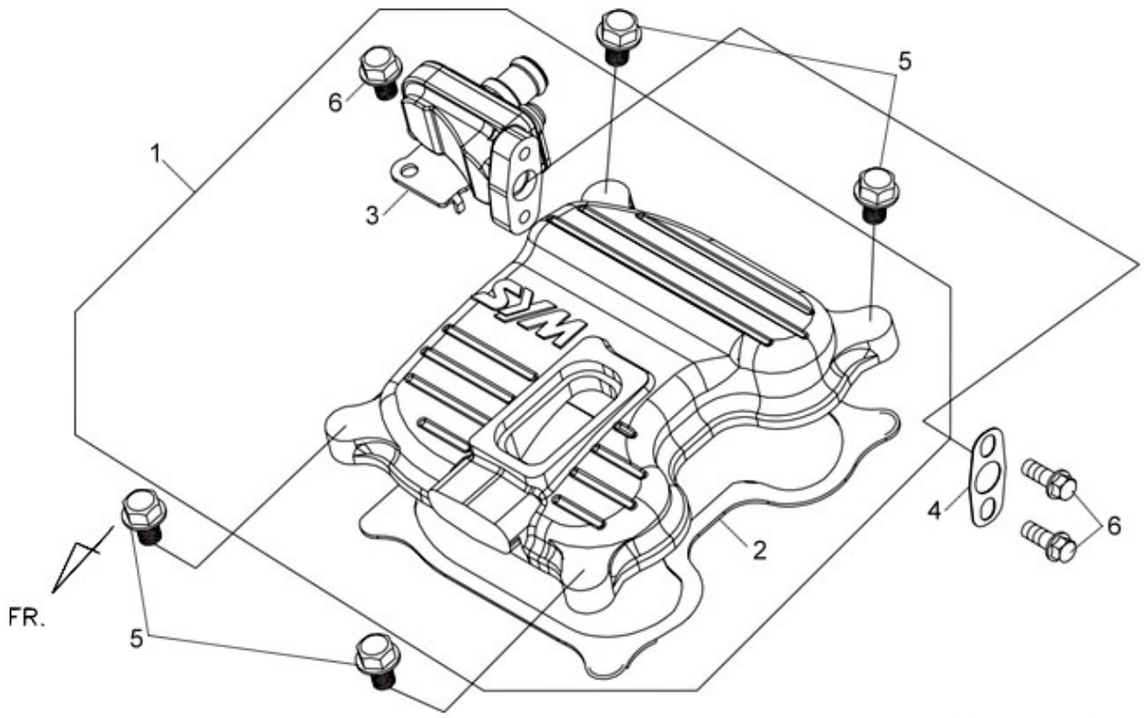

Pictures reference only

	PARTS NUMBER	DESCRIPTION	QTY	EFFECTIVE DATE	
1	1230A-BAA-000	CYL. HAED COVER ASSY.GY-7520U	1		
2	12391-HMA-000	CYLINDER HEAD COVER GASKE	1		
3	15500-BAA-000	REED VALVE ASSY	1		
4	18654-N14-000	AIR PIPE GASKET	2		
5	90002-BAA-000	HEAD COVER BOLT	4		
6	96001-06016-07	FLANGE BOLT SH 6X16	3		

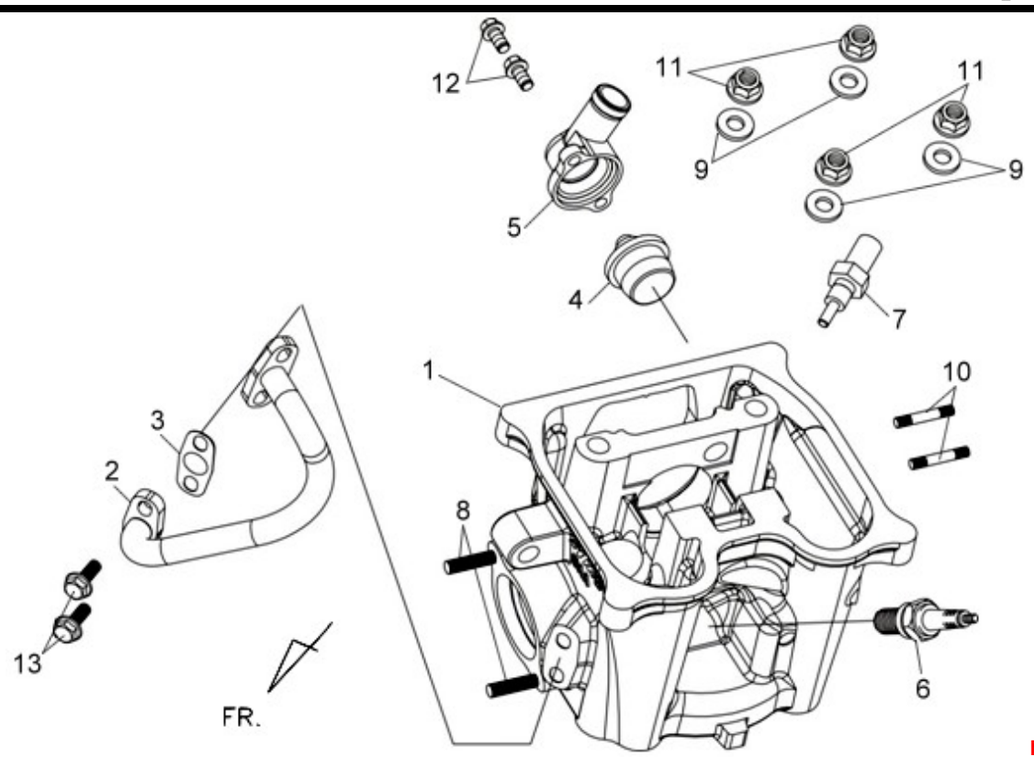

reference only

	PARTS NUMBER	DESCRIPTION	QTY	EFFECTIVE DATE	
1	12200-BAA-000	CYLINDER HEAD COMP GY-7520U	1		
2	18647-BAA-000	AIR PIPE COMP	1		
3	18654-N14-000	AIR PIPE GASKET	1		
4	19300-HMA-000	THERMOSTAT ASSY.	1		
5	19315-BAA-000	THERMOSTAT COVER GY-7520U	1		
6	1PCR8E-3	PLUG CR8E	1		
7	37880-HMC-000	TW SENSOR	1		
8	90034-BAA-000	SPECIAL STUD BOLT 8*36	2		
9	90442-HMA-000	SEAL WASHER	4		
10	92900-06028-0B	STUB BOLT 6X28	2		
11	94050-10080	FLANGE NUT 10MM	4		
12	96001-06014-08	FLANGE BOLT SH 6X14	3		
13	96001-06016-07	FLANGE BOLT SH 6X16	2		

※ Please check the color & stripe information according to the color index ! **TEAMWORLD IND. 2011.09**

※N/A = SUBSTITUTE ※Y = EXCHANGEABLE ※N =NOT EXCHANGEABLE

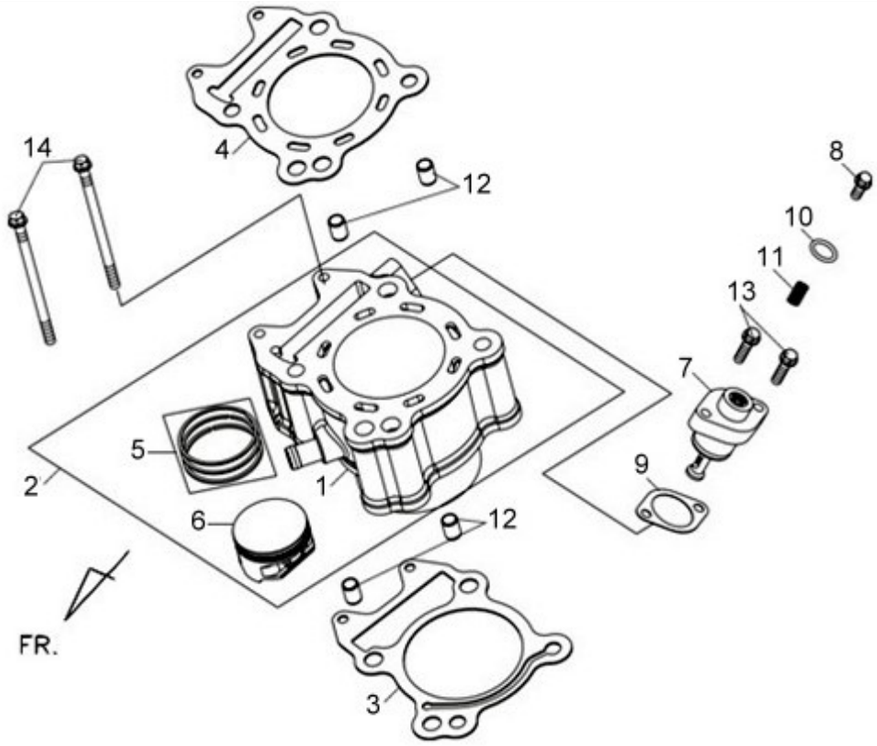

es reference only

	PARTS NUMBER	DESCRIPTION	QTY	EFFECTIVE DATE	
1	12100-BAA-000	CYLINDER COMP.(GY-7520U)	1		
2	12100-BAA-000-A	CYLINDER SET.(GY-7520U)	1		
3	12191-HMA-000	CYLINDER GASKET	1		
4	12251-HMA-000	CYLINDER HEAD GASKET	1		
5	13010-HMA-000	PISTON RING SET	1		
6	13101-BAA-000	PISTON	1		
7	14520-BAA-000	TENSIONER LIFTER ASSY GY-7520U	1		
8	14522-BAA-000	ADJUSTER BOLT	1		
9	14523-M9Q-000	TENSIONER LIFTER GASKET	1		
10	14524-H6T-000	OIL-RING	1		
11	14525-H6T-000	ADJUSTER SPRING	1		
12	94301-12200	DOWEL PIN 12*20	4		
13	96001-06022-08	FLANGE BOLT SH 6X22	2		
14	96001-06090-07	FLANGE BOLT SH 6X90	2		

※ Please check the color & stripe information according to the color index ! **TEAMWORLD IND. 2011.09**

※N/A = SUBSTITUTE ※Y = EXCHANGEABLE ※N =NOT EXCHANGEABLE

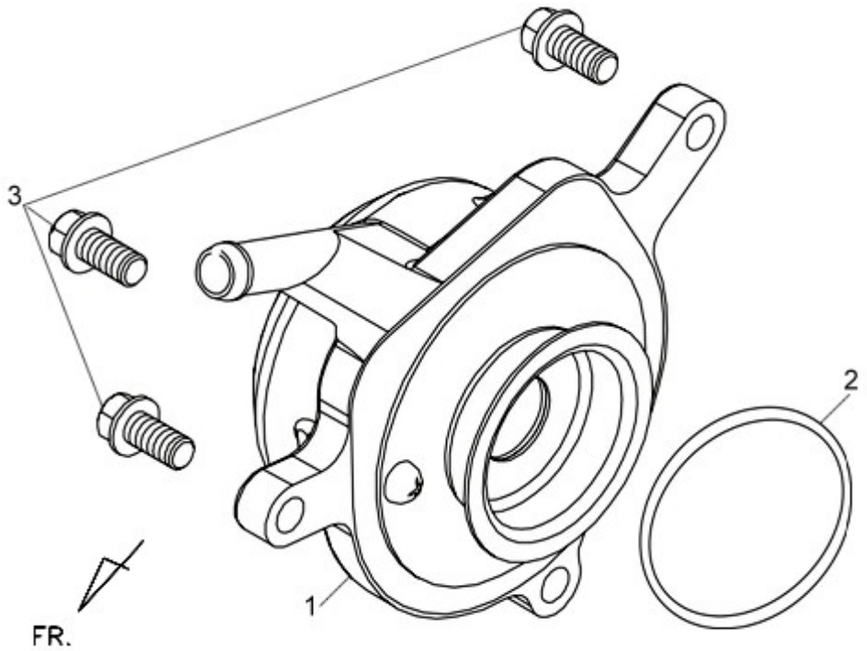

Pictures reference only

	PARTS NUMBER	DESCRIPTION	QTY	EFFECTIVE DATE	
1	1231A-BAA-000	CYL. HEAD SIDE COVER ASSY. GY-7520U	1		
2	91301-HMA-000	HEAD SIDE COVER O-RING	1		
3	96001-06018-07	SH. FLANGE BOLT	3		

※ Please check the color & stripe information according to the color index ! **TEAMWORLD IND. 2011.09**

※N/A = SUBSTITUTE ※Y = EXCHANGEABLE ※N =NOT EXCHANGEABLE

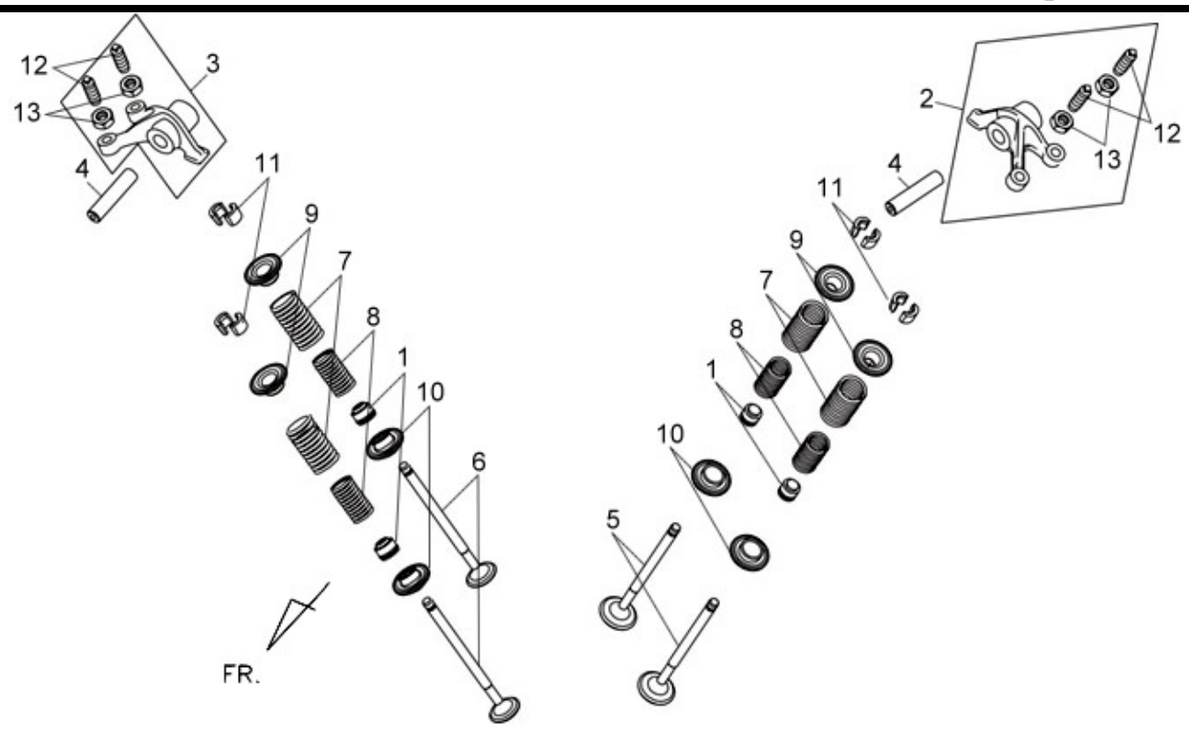

Pictures reference only

	PARTS NUMBER	DESCRIPTION	QTY	EFFECTIVE DATE	
1	12209-H6B-900	VALVE STEM SEAL	4		
2	1443A-RB1-000	IN. VALVE ROCKER ARM ASSY	1		
3	1444A-RB1-000	EXH. VALVE ROCKER ARM ASSY	1		
4	14451-HMA-000	ROCKER ARM SHAFT	2		
5	14711-HMA-000	INLET VALVE	2		
6	14721-RFS-000	EX.VALVE	2		
7	14751-HMA-000	VALVE OUTER SPRING	4		
8	14761-HMA-000	INNER VALVE SPRING	4		
9	14771-GB4-680	VALVE SPRING RETAINER	4		
10	14777-KN7-670	VALVE SPRING SEAT	4		
11	14781-M9Q-000-A	VALVE COTTER SET(1SET/4PCS)	1		
12	90012-HLK-000	TAPPET ADJUSTING SCREW	2		
13	90206-HLK-000	TAPPET ADJUSTING NUT	2		

※ Please check the color & stripe information according to the color index ! **TEAMWORLD IND. 2011.09**

※N/A = SUBSTITUTE ※Y = EXCHANGEABLE ※N =NOT EXCHANGEABLE

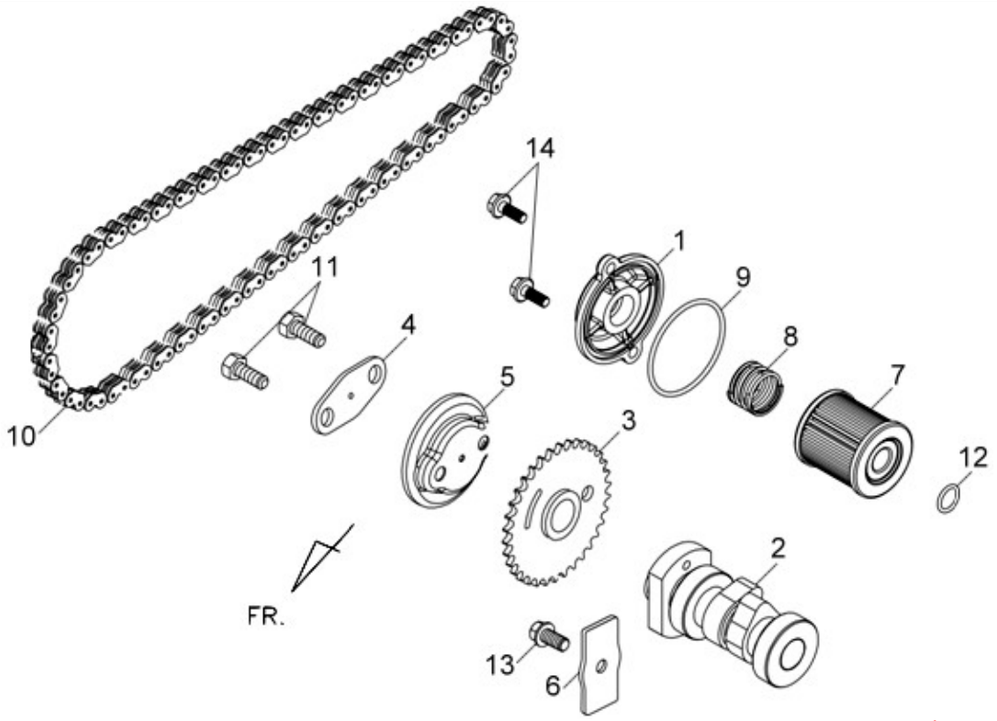

Pictures reference only

	PARTS NUMBER	DESCRIPTION	QTY	EFFECTIVE DATE	
1	1133B-BAA-000	OIL FILTER COVER ASSY.GY-7520U	1		
2	14100-RB1-000	CAM SHAFT COMP	1		
3	14105-RFA-000	CAM SPROCKET	1		
4	14105-X01-000	CAM SPROCKET WASHER	1		
5	14108-M36-000	CENTRIFUGAL DISK	1		
6	14457-HMA-000	CAM SHAFT SETTING PLATE1.	1		
7	15400-N01-000	OIL FILTER	1		
8	15414-N01-000	OIL FILTER SPRING	1		
9	15415-N01-010	O-RING 52.3X2.4	1		
10	1C14401-RFA-000	CAM CHAIN 92RH2010-100L	1		
11	90083-X01-000	LOCK BOLT 6MM	2		
12	91306-N01-010	O-RING 12.5X2	1		
13	96001-06014-08	FLANGE BOLT SH 6X14	1		
14	96001-06018-07	SH. FLANGE BOLT	2		

※ Please check the color & stripe information according to the color index ! **TEAMWORLD IND. 2011.09**

※N/A = SUBSTITUTE ※Y = EXCHANGEABLE ※N =NOT EXCHANGEABLE

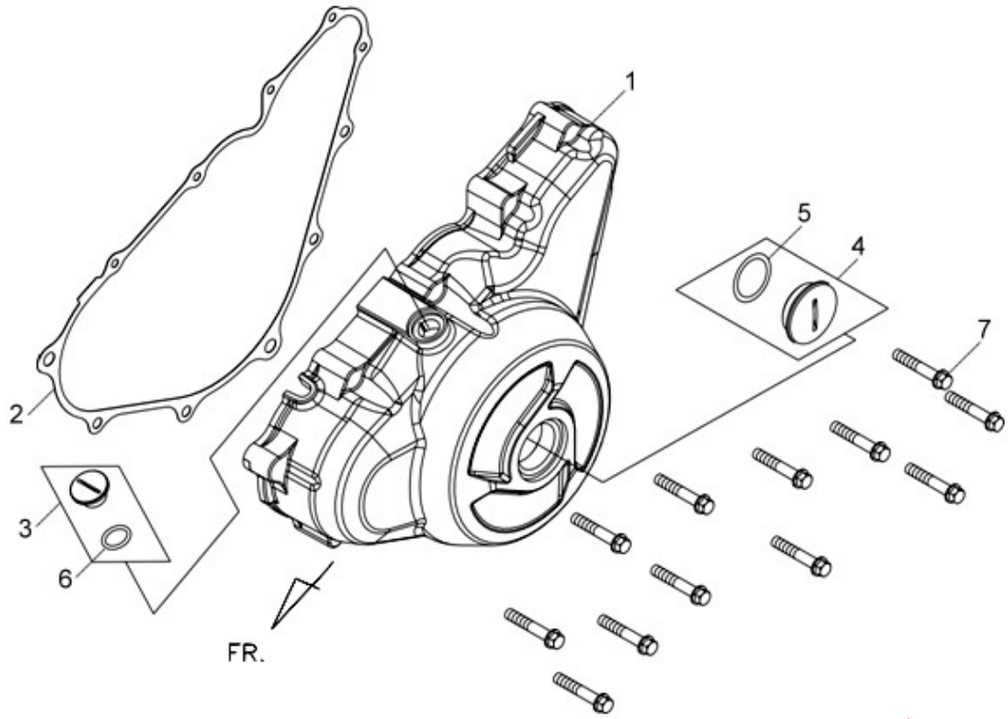

Pictures reference only

	PARTS NUMBER	DESCRIPTION	QTY	EFFECTIVE DATE	
1	11341-BAA-000	L CRANK CASE COVER GY-7520U	1		
2	11395-BAA-000	L. CRANK CASE GASKET	1		
3	9008A-B9A-000	ACG. CAP ASSY. 14MM	1		
4	90087-B9A-000-IT	A.C.GEN.CAP 30MM GY-7520U	1		
5	91302-567-003	OIL RING 27.4X2.4	1		
6	91303-377-000	O-RING 13.8X2.5	1		
7	96001-06040-07	FLANGE BOLT SH 6X40	11		

※ Please check the color & stripe information according to the color index ! **TEAMWORLD IND. 2011.09**

※N/A = SUBSTITUTE ※Y = EXCHANGEABLE ※N =NOT EXCHANGEABLE

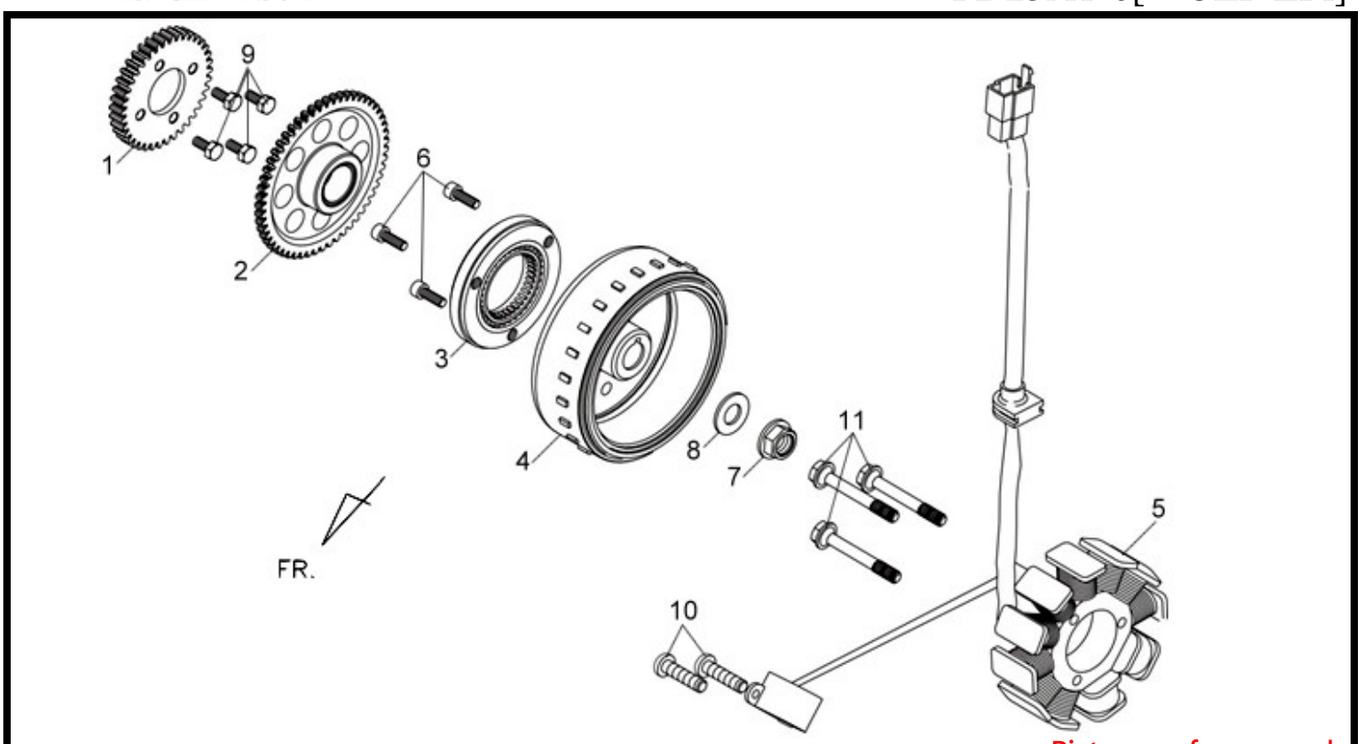

Pictures reference only

	PARTS NUMBER	DESCRIPTION	QTY	EFFECTIVE DATE	
1	13331-BAA-000	BALANCE SHAFT DRIVE GEAR	1		
2	28110-BAA-000	STARTING CLUTCH GEAR COMP	1		
3	2812A-BAA-000	ONE WAY CLUTCH ASSY	1		
4	31110-BAA-000	FLYWHEEL COMP	1		
5	31120-BAA-000	STATOR COMP	1		
6	90157-F3G-000	SOCKET BOLT 8X20	3		
7	90201-KR8-751-M1	FLANGE NUT 14MM	1		
8	90401-KJ9-000	THRUST WASHER 14X28X2	2		
9	92101-06014-0H	HEX BOLT	4		
10	93500-05016-0A	PAN SCREW 5X16	2		
11	96001-06035-00	FLANGE SH BOLT 6X35	3		

※ Please check the color & stripe information according to the color index ! **TEAMWORLD IND. 2011.09**

※N/A = SUBSTITUTE ※Y = EXCHANGEABLE ※N =NOT EXCHANGEABLE

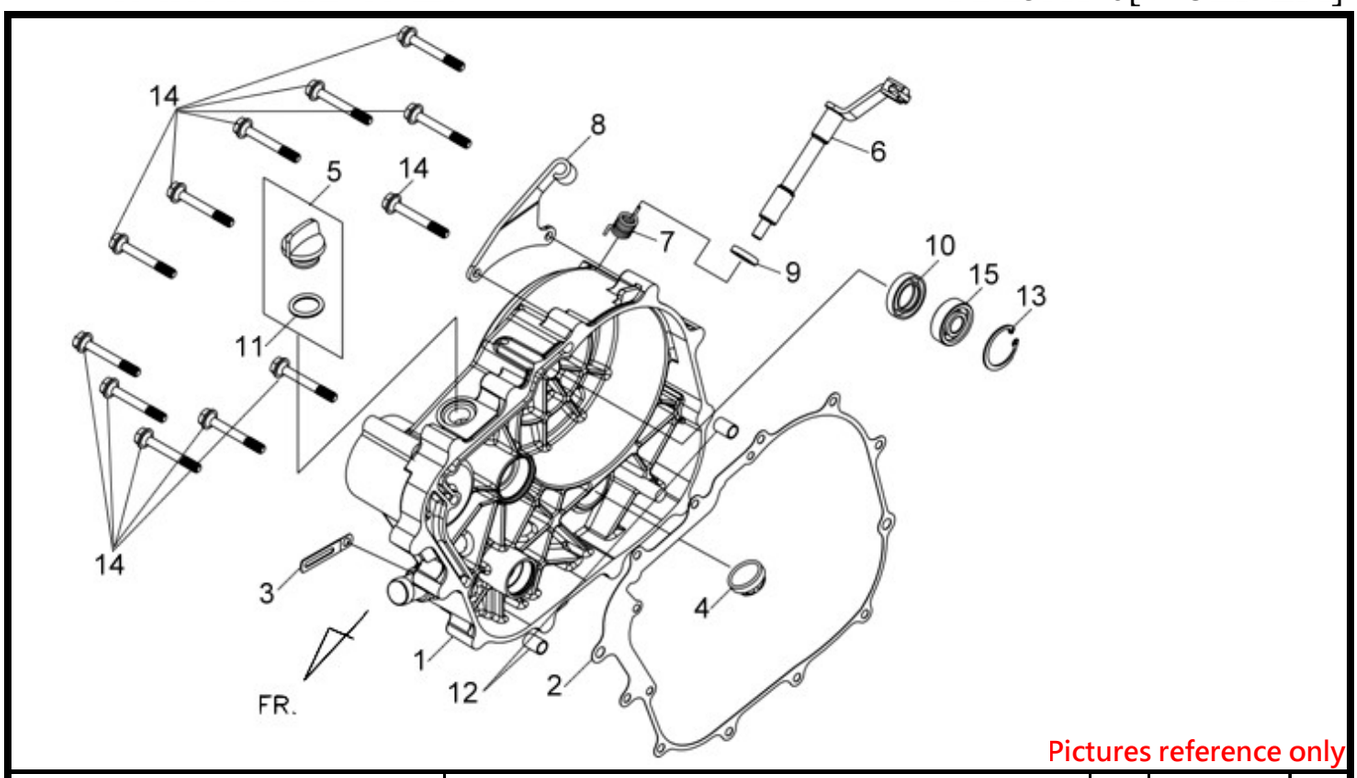

Pictures reference only

	PARTS NUMBER	DESCRIPTION	QTY	EFFECTIVE DATE	
1	11330-BAA-000	R CRANK CASE COVER GY-7520U	1		
2	11393-BAA-000	R. CRANK CASE COVER GASKET	1		
3	12342-X01-000	CLAMP	1		
4	15652-B9A-000	OIL LEVEL GAUGE	1		
5	1565A-BAA-000	OIL FILLER CAP ASSY	1		
6	22710-BAA-000	CLUTCH LEVER COMP	1		
7	22815-R02-000	CLUTCH LEVER SPRING	1		
8	22838-BAA-000	CLUTCH WIRE HOLDER	1		
9	90076-N01-000	OIL SEAL 13X20X4	1		
10	91202-HMA-000	OIL SEAL	1		
11	91307-035-000	O-RING 18X3	1		
12	94301-08140	DOWEL PIN 8X14	2		
13	94520-32000	IN. CIR. CLIP	1		
14	96001-06040-07	FLANGE BOLT SH 6X40	12		
15	96140-62013-10	RADIAL BALL BRG. 6201LUC3	1		

※ Please check the color & stripe information according to the color index ! **TEAMWORLD IND. 2011.09**

※N/A = SUBSTITUTE ※Y = EXCHANGEABLE ※N =NOT EXCHANGEABLE

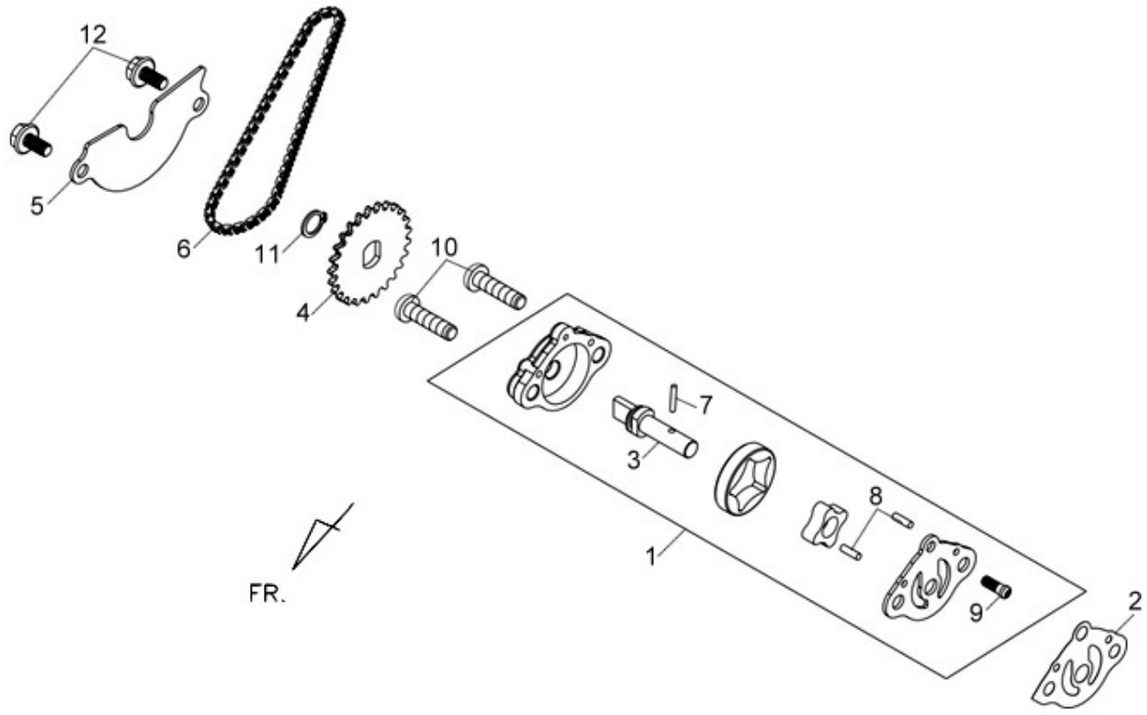

Pictures reference only

	PARTS NUMBER	DESCRIPTION	QTY	EFFECTIVE DATE	
1	15100-HMA-000	OIL PUMP ASSY.	1		
2	15126-B8A-000	OIL PUMP GASKET	1		
3	15132-HMA-000	OIL PUMP SHAFT	1		
4	15133-HMA-000	OIL PUMP DRIVEN SPROCKET	1		
5	15711-HML-000	OIL SEPARATER	1		
6	1C15141-BAA-000	OIL PUMP DRIVE CHAIN 46L	1		
7	91101-HMA-000	PIN 2.5*11.8	1		
8	91103-A3F-000	ROLLER 3*9.8	2		
9	93500-03008-1A	PAN SCREW 3X8	1		
10	93500-06025-0H	PAN SCREW	2		
11	94510-10000	CIR CLIP 10MM	1		
12	96001-06012-08	FLANGE BOLT SH 6X12	3		

※ Please check the color & stripe information according to the color index ! **TEAMWORLD IND. 2011.09**

※N/A = SUBSTITUTE ※Y = EXCHANGEABLE ※N =NOT EXCHANGEABLE

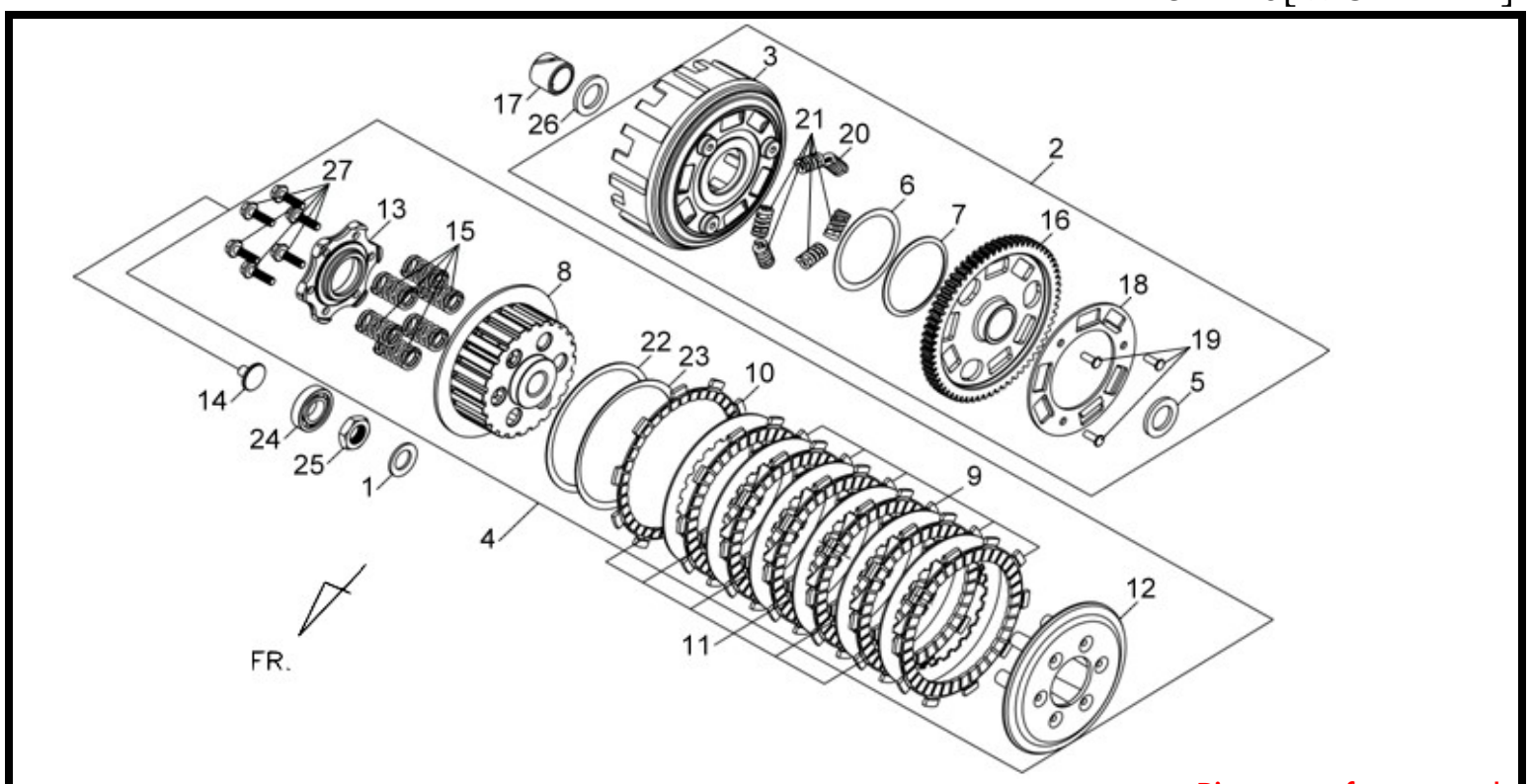

Pictures reference only

	PARTS NUMBER	DESCRIPTION	QTY	EFFECTIVE DATE	
1	15451-B08-000	OIL FILTER LOCK WASHER	2		
2	22100-BAA-000	CLUTCH OUTER COMP	1		
3	22101-BAA-300	CLUTCH OUTER	1		
4	2210A-BAA-000	CLUTCH CENTER ASSY	1		
5	22116-BAA-000	CLUTCH OUTER COLLAR	1		
6	22118-BAA-000	CLUTCH WASHER 56.5*67.5	1		
7	22119-BAA-000	CLUTCH WASHER	1		
8	22121-BAA-000	CLUTCH CENTER	1		
9	22201-BAA-000-A	CLUTCH FRICTION DISK(6PCS/1SET)	1		
10	22202-BAA-000	CLUTCH FRICTION DISK	1		
11	22311-BAA-000-A	CLUCH PLATE(6PCS/1SET)	1		
12	22350-BAA-000	CLUTCH PRESSURE PLATE	1		
13	22361-BAA-000	CLUTCH LIFTER PLATE	1		
14	22366-N01-000	CLUTCH LIETER ROD	1		
15	22401-BAA-000	CLUTCH SPRING	6		
16	23111-BAA-300	PRIMARY DRIVEN GEAR	1		
17	23112-BAA-000	CLUTCH CENTER GUIDE	1		
18	23114-BAA-300	DRIVEN GEAR SIDE PLATE	1		
19	23115-BAA-300	RIVET 5MM	3		
20	23116-BAA-300	CLUTCH OUTER SPRING A	1		
21	23117-BAA-300	CLUTCH OUTER SPRING B	5		
22	23118-BAA-000	CLUTCH WASHER 96.5*107	1		
23	23119-BAA-000	CONED WASHER	1		
24	90002-R02-000	BEARING 16003	1		
25	90231-N01-000	FRIMARY GEAR NUT	2		
26	90402-BAA-000	THRUST WASHER 20.2*36*2.5	1		
27	95701-06022-08	FLANGE BOLT 6X22	6		

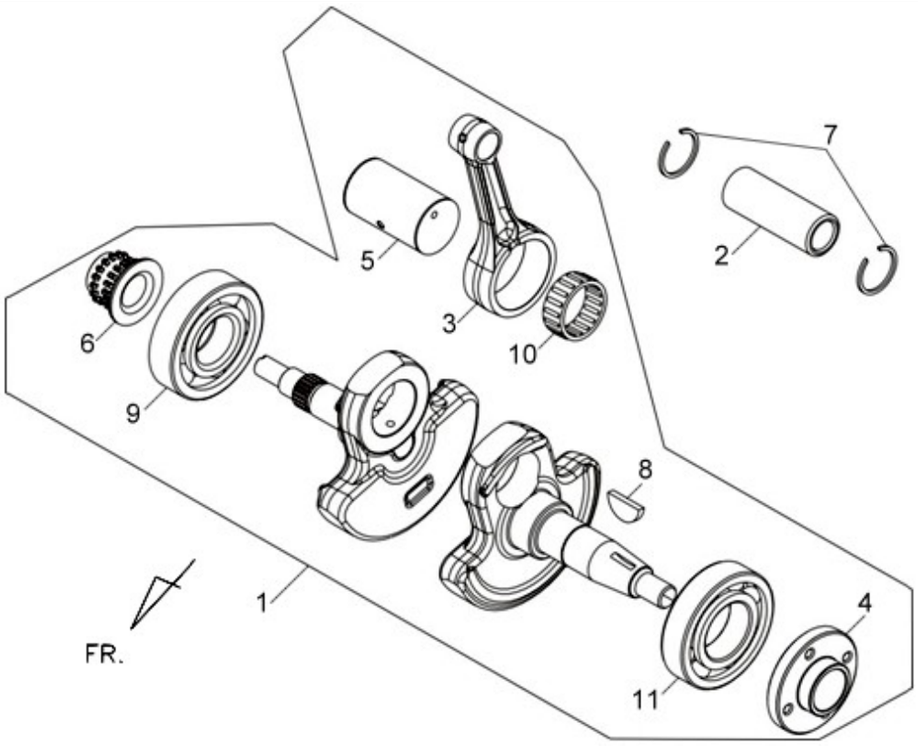

:tures reference only

	PARTS NUMBER	DESCRIPTION	QTY	EFFECTIVE DATE	
1	13000-BAA-000	CRANK SHAFT COMP.	1		
2	13111-HMA-000	PISION PIN	1		
3	13201-BAA-000	CONNECTING ROD	1		
4	13322-BAA-300	BALANCE SHAFT DRIVE GEAR FLANGE	1		
5	13381-BAA-300	CRANK PIN	1		
6	14311-BAA-300	TIMING SPROCKET	1		
7	90601-HMA-000	PISTON PIN CLIP	1		
8	90701-HB6-010	WOODRUFF KEY 25X14X4	1		
9	91001-BAA-000	RADIAL BALL BRG. CSB306JR2XT1C3	1		
10	91003-BAA-000	CONN. ROD BRG. PK34*43*19.8	1		
11	91005-BAA-000	RADIAL BALL BRG. CSB207JR2CS08	1		

※ Please check the color & stripe information according to the color index ! **TEAMWORLD IND. 2011.09**

※N/A = SUBSTITUTE ※Y = EXCHANGEABLE ※N =NOT EXCHANGEABLE

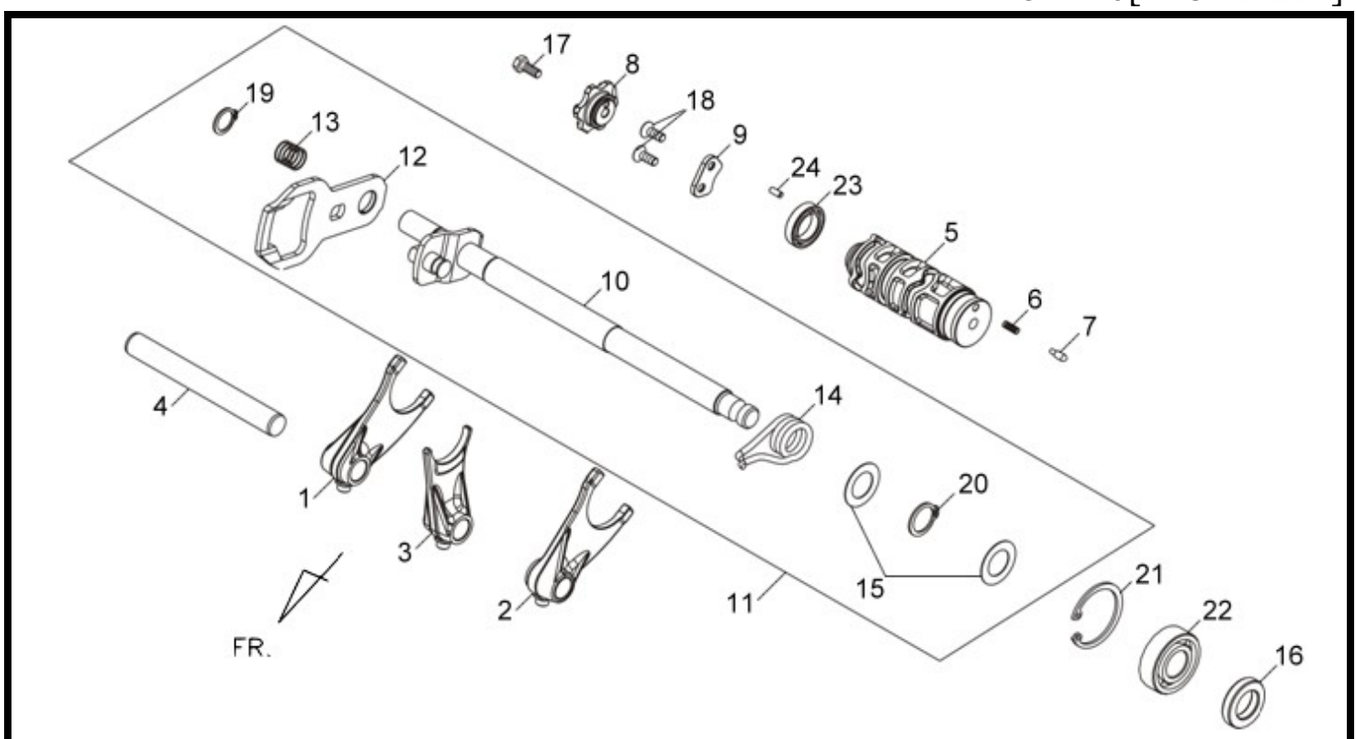

Pictures reference only

	PARTS NUMBER	DESCRIPTION	QTY	EFFECTIVE DATE	
1	24211-BAA-000	RIGHT GEAR SHIFT FORK	1		
2	24221-BAA-000	LEFT GEAR SHIFT FORK	1		
3	24231-BAA-000	CENTER GEAR SHIFT FORK	1		
4	24241-M2Q-000	GEAR FORK GUIDE SHAFT	1		
5	24301-BAA-000	GEAR SHIFT DRUM	1		
6	24319-R02-000	GEAR INDICATION DRILL SPG	1		
7	24323-R02-000	GEAR INDICATION DRILL	1		
8	24411-BAA-000	GEAR SHIFT CAM	1		
9	24416-X01-000	SHIFT DRUM RETAINER	1		
10	24610-BAA-000	GEAR SHIFT SPINDLE COMP	1		
11	2461A-BAA-000	GEAR SHIFT SPINDLE ASSY	1		
12	24621-BAA-000	GEAR SHAFT PLATE	1		
13	24631-107-000	SPRING	1		
14	24652-BAA-000	GEAR SHIFT RETURN SPRING	1		
15	90451-B04-000	THRUST WASHER 15MM	2		
16	91206-B06-000	OIL SEAL 14X28X7	1		
17	92101-06030-0H	HEX. BOLT 6*28	1		
18	93600-06016-0A	SCREW FLAT 6X16	2		
19	94510-12000	CIR.CLIP EX.	1		
20	94510-15000	CLIP 15MM	1		
21	94520-35150	IN CIRCLIP 35MM	1		
22	96100-62020-00	RAD.BRG.BALL 6202T	1		
23	96100-68040-10	RADIAL BALL BRG.6804	1		
24	96220-40100	ROLLER 4X10	1		

※N/A = SUBSTITUTE ※Y = EXCHANGEABLE ※N =NOT EXCHANGEABLE

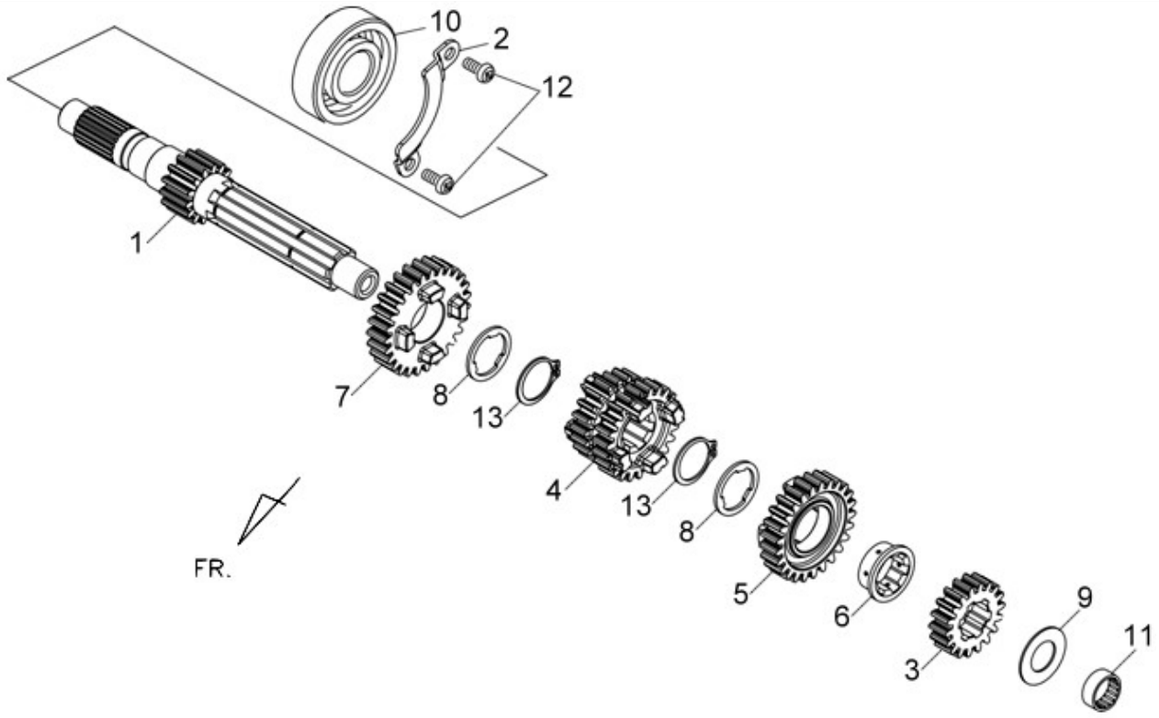

Pictures reference only

	PARTS NUMBER	DESCRIPTION	QTY	EFFECTIVE DATE	
1	23210-BAA-000	MAIN SHAFT COMP	1		
2	23213-BAA-000	BEARING RETAINER	1		
3	23441-BAA-000	M-2 GEAR	1		
4	23461-BAA-000	M-3 &M4 GEAR	1		
5	23501-BAA-000	M-5 GEAR	1		
6	23502-BAA-000	M-5 COLLAR	1		
7	23521-BAA-000	M-6 GEAR	1		
8	90455-BAA-000	SPLINE WASHER 22MM	2		
9	90462-B04-000	THRUST WASHER 16mm	1		
10	91001-H6B-300	RADIAL BALL BRG.63/22	1		
11	91002-BAA-000	NEEDLE BRG. NK16*24*16	1		
12	93500-06012-0A	PAN SCREW 6X12	2		
13	94510-22000	CLIP 22MM	2		

※ Please check the color & stripe information according to the color index ! **TEAMWORLD IND. 2011.09**

※N/A = SUBSTITUTE ※Y = EXCHANGEABLE ※N =NOT EXCHANGEABLE

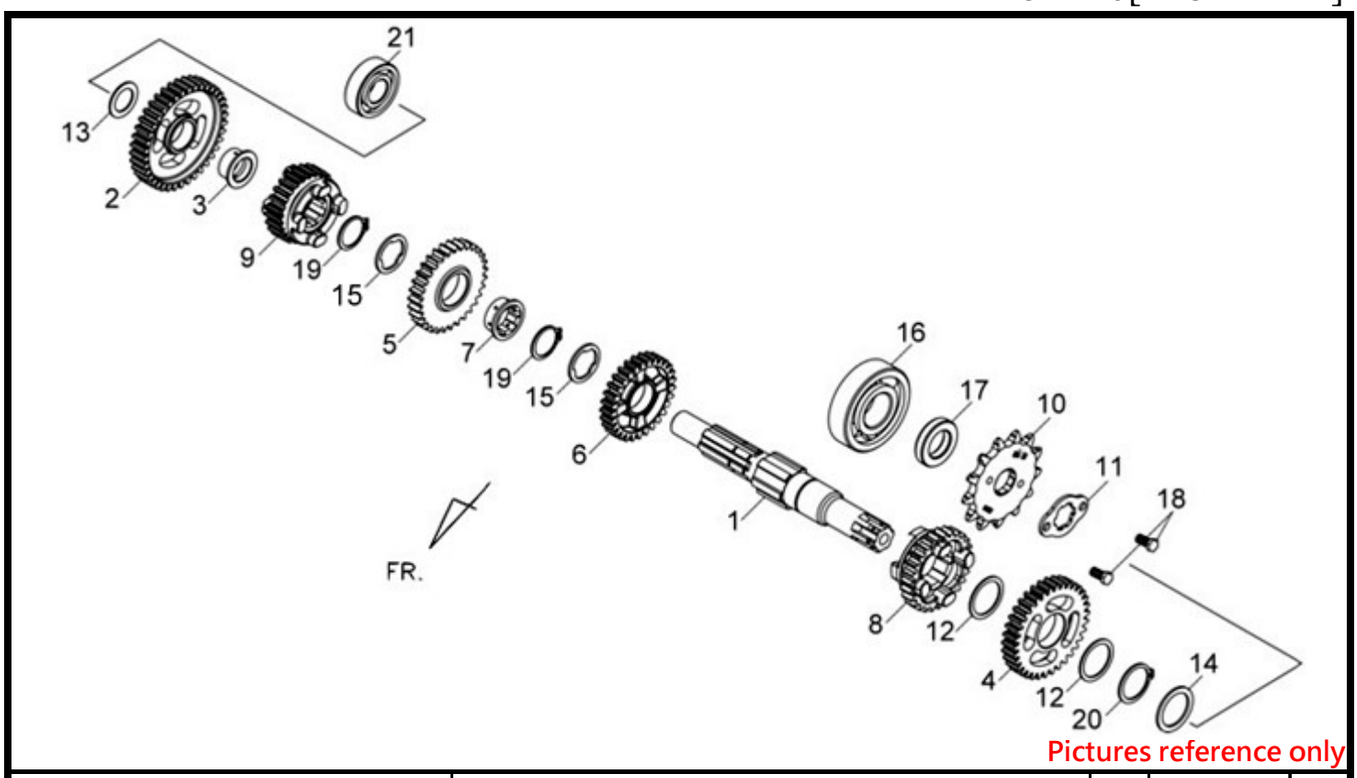

	PARTS NUMBER	DESCRIPTION	QTY	EFFECTIVE DATE	
1	23221-BAA-000	COUNTER SHAFT	1		
2	23426-BAA-000	C-1 GEAR	1		
3	23427-BAA-000	C-1 COLLAR	1		
4	23451-BAA-000	C-2 GEAR 31T	1		
5	23471-BAA-000	C-3 GEAR 28T	1		
6	23491-BAA-000	C-4 GEAR	1		
7	23502-BAA-000	M-5 COLLAR	1		
8	23511-BAA-000	C-5 GEAR	1		
9	23531-BAA-000	C-6 GEAR	1		
10	23801-BAA-000	DRIVE SPROCKET 13T	1		
11	23811-KR3-600	DRIVE SPRKT. FIXING PLATE	1		
12	90403-BAA-000	THRUST WASHER 25*31*1	2		
13	90404-BAA-000	THRUST WASHER 17.2*26*1	1		
14	90405-BAA-000	THRUST WASHER 25*33*1.5	1		
15	90455-BAA-000	SPLINE WASHER 22MM	2		
16	91004-BAA-000	RADIAL BALL BRG. TMB305C3	1		
17	91201-B06-000	OIL SEAL 20X34X7	1		
18	92101-06010-0H	HEX BOLT 6X10	2		
19	94510-22000	CLIP 22MM	2		
20	94510-25000	EX. CIR CLIP	1		
21	96120-62030-10	RAD.BALL.BRG.6203TZ/2A	1		

※ Please check the color & stripe information according to the color index ! **TEAMWORLD IND. 2011.09**

※N/A = SUBSTITUTE ※Y = EXCHANGEABLE ※N =NOT EXCHANGEABLE

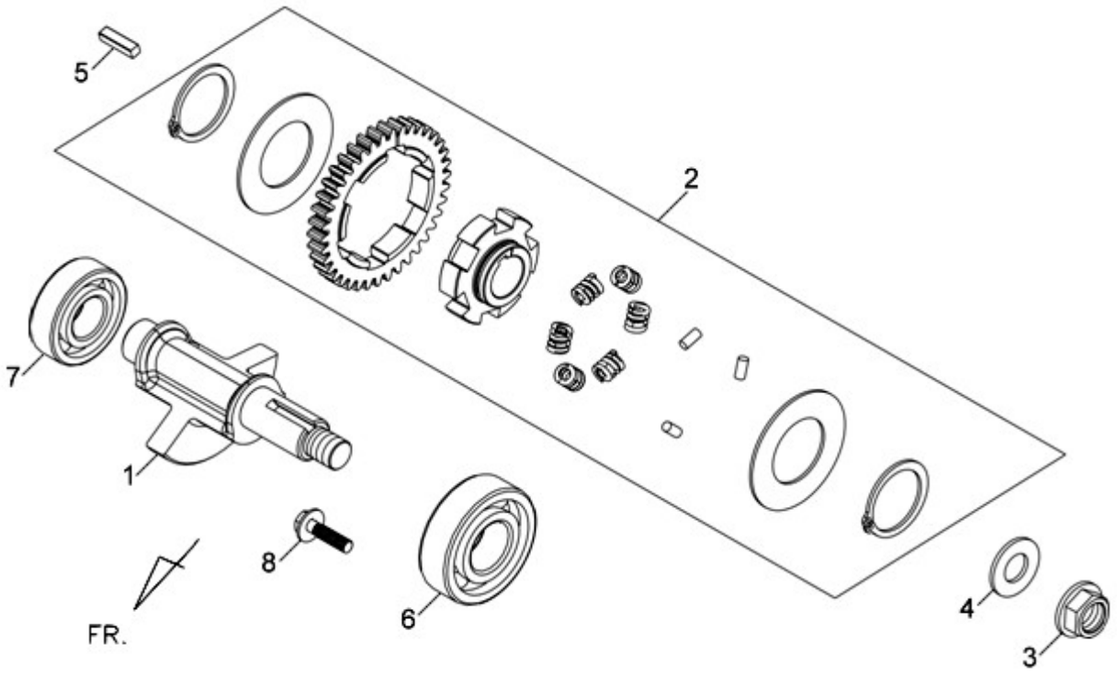

Pictures reference only

	PARTS NUMBER	DESCRIPTION	QTY	EFFECTIVE DATE	
1	13301-BAA-000	BALANCE SHAFT	1		
2	1333A-BAA-000	BALANCE SHAFT DRIVE GEAR	1		
3	90201-KR8-751-M1	FLANGE NUT 14MM	2		
4	90401-KJ9-000	THRUST WASHER 14X28X2	2		
5	90741-BAA-000	SUNK KEY 5*5*20	1		
6	91104-BAA-000	RADIAL BALL BEARING CSB304	1		
7	91104-KN7-670	RADIAL BALL BRG CSB204JR2	1		
8	93404-06016-00	WASHER BOLT 6X16	1		

※ Please check the color & stripe information according to the color index ! **TEAMWORLD IND. 2011.09**

※N/A = SUBSTITUTE ※Y = EXCHANGEABLE ※N =NOT EXCHANGEABLE

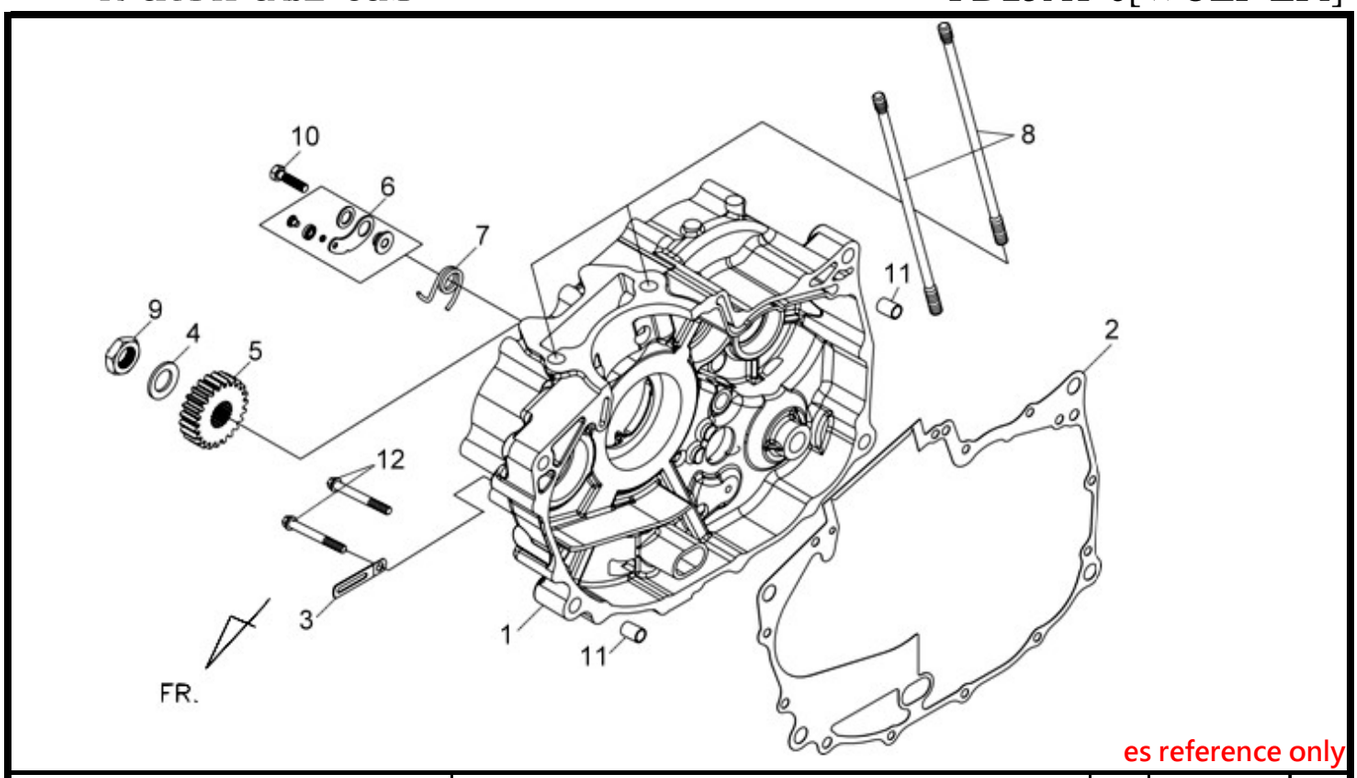

es reference only

	PARTS NUMBER	DESCRIPTION	QTY	EFFECTIVE DATE	
1	11100-BAA-000-BK	R CRANK CASE COMP GY-7520U	1		
2	11191-BAA-000	CRANK CASE GASKET	1		
3	12342-X01-000	CLAMP	3		
4	15451-B08-000	OIL FILTER LOCK WASHER	2		
5	23121-BAA-000	PRIMARY DRIVE GEAR	1		
6	24430-BAA-000	SHIFT DRUM STOPPER COMP	1		
7	24435-B3U-000	SHIFT DRUM STOPPER SPRING	1		
8	90031-HMA-000	CYLINDER STUD BOLT A	2		
9	90231-N01-000	FRIMARY GEAR NUT	2		
10	92101-06020-0H	HEX BOLT 6X20	1		
11	94301-08140	DOWEL PIN 8X14	2		
12	96001-06055-07	FLANGE BOLT SH 6X55	2		

※ Please check the color & stripe information according to the color index ! **TEAMWORLD IND. 2011.09**

※N/A = SUBSTITUTE ※Y = EXCHANGEABLE ※N =NOT EXCHANGEABLE

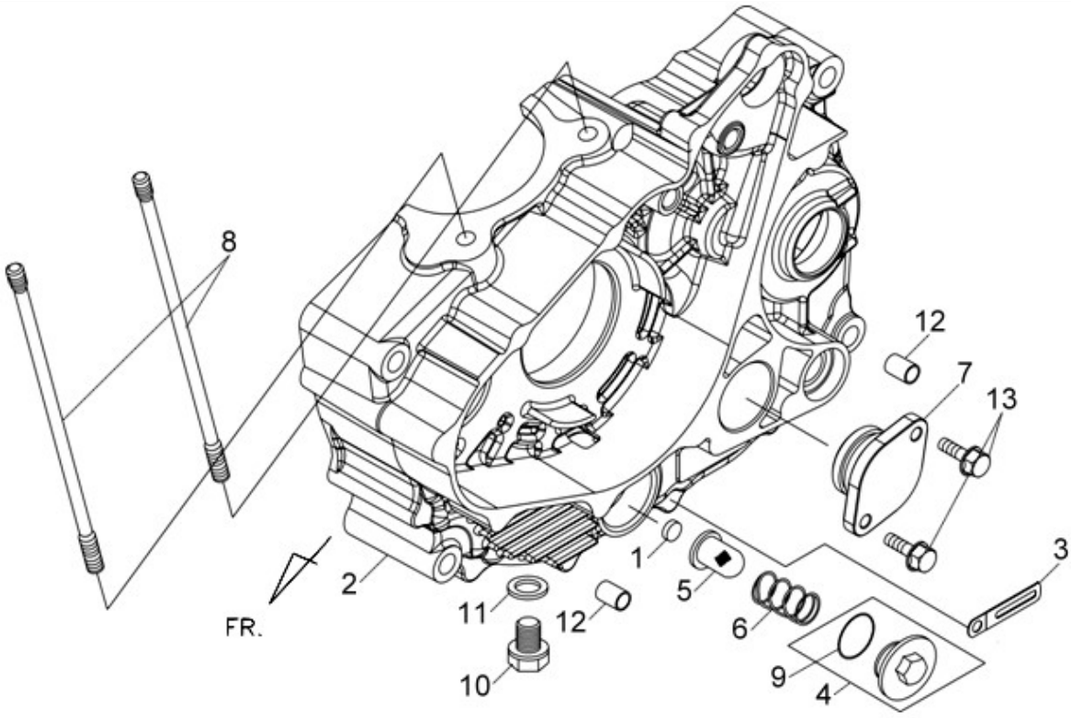

Pictures reference only

	PARTS NUMBER	DESCRIPTION	QTY	EFFECTIVE DATE	
1	11109-BAA-000	MAGNET	1		
2	11200-BAA-000-BK	L CRANK CASE COMP GY-7520U	1		
3	12342-X01-000	CLAMP	1		
4	1236A-B9A-000-IT	TAPPET ADJ. HOLE CAP ASSY GY-7520U	1		
5	15421-B9D-000	OIL FILTER SCREEN	1		
6	15426-107-000	OIL FILTER SCREEN SPRING	1		
7	35759-BAA-000	CHANGE SW. ASSY.	1		
8	90032-HMA-000	CYLINDER STUD BOLT B	2		
9	91303-B08-000	O-RING 35X3	1		
10	92800-12000	DRAIN PLUG BOLT 12MM	1		
11	94109-12000	DRAIN PLUG WASHER 12MM	1		
12	94301-08140	DOWEL PIN 8X14	2		
13	95701-06020-07	FLANGE BOLT 6X20	2		

※ Please check the color & stripe information according to the color index ! **TEAMWORLD IND. 2011.09**

※N/A = SUBSTITUTE ※Y = EXCHANGEABLE ※N =NOT EXCHANGEABLE

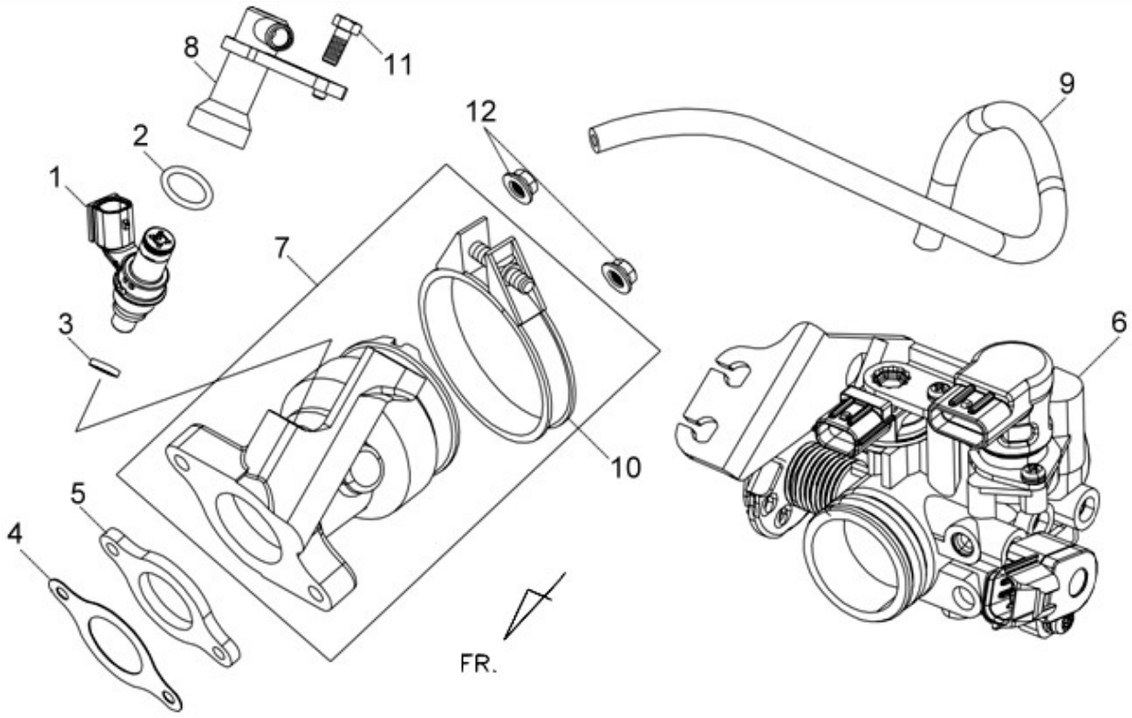

Pictures reference only

	PARTS NUMBER	DESCRIPTION	QTY	EFFECTIVE DATE	
1	06414-LEF-000	FUEL INTECTOR	1		
2	06415-HNS-000	O-RING	1		
3	06416-HNS-000	SEAL-RING	1		
4	16201-HMC-000	CARB. INSULATOR GASKET	1		
5	1621A-HMC-000	CARBURETOR INSULATOR ASSY	1		
6	16401-BAA-000	THROTTLE BODY ASSY	1		
7	1711A-BAA-000	INLET PIPE ASSY	1		
8	17120-BAA-000	FUEL INJECTOR CAP ASSY	1		
9	17685-BAA-000	CANISTER-T/B TUBE	1		
10	90653-HMA-000	INLET PIPE BAND 48	1		
11	92101-06016-0H	HEX BOLT 6*16	1		
12	94050-06000	FLANGE NUT 6MM	2		

※ Please check the color & stripe information according to the color index ! **TEAMWORLD IND. 2011.09**

※N/A = SUBSTITUTE ※Y = EXCHANGEABLE ※N =NOT EXCHANGEABLE

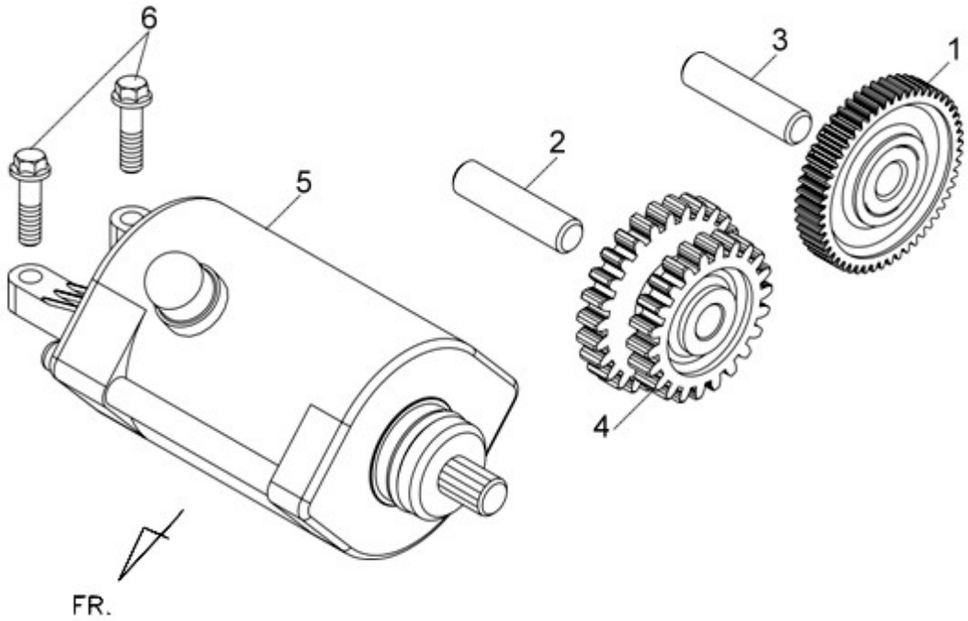

Pictures reference only

	PARTS NUMBER	DESCRIPTION	QTY	EFFECTIVE DATE	
1	28100-BAA-000	START REDUCTION GEAR COMP	1		
2	28102-BAA-000	START REDUCTION GEAR SHAFT	1		
3	28102-RB1-000	START.REDUCTION GEAR SHAFT(S10X37)	1		
4	28104-BAA-000	START REDUCTION GEAR B	1		
5	31200-BAA-000	START MOTOR ASSY	1		
6	96001-06022-08	FLANGE BOLT SH 6X22	2		

※ Please check the color & stripe information according to the color index ! **TEAMWORLD IND. 2011.0**

※N/A = SUBSTITUTE ※Y = EXCHANGEABLE ※N =NOT EXCHANGEABLE

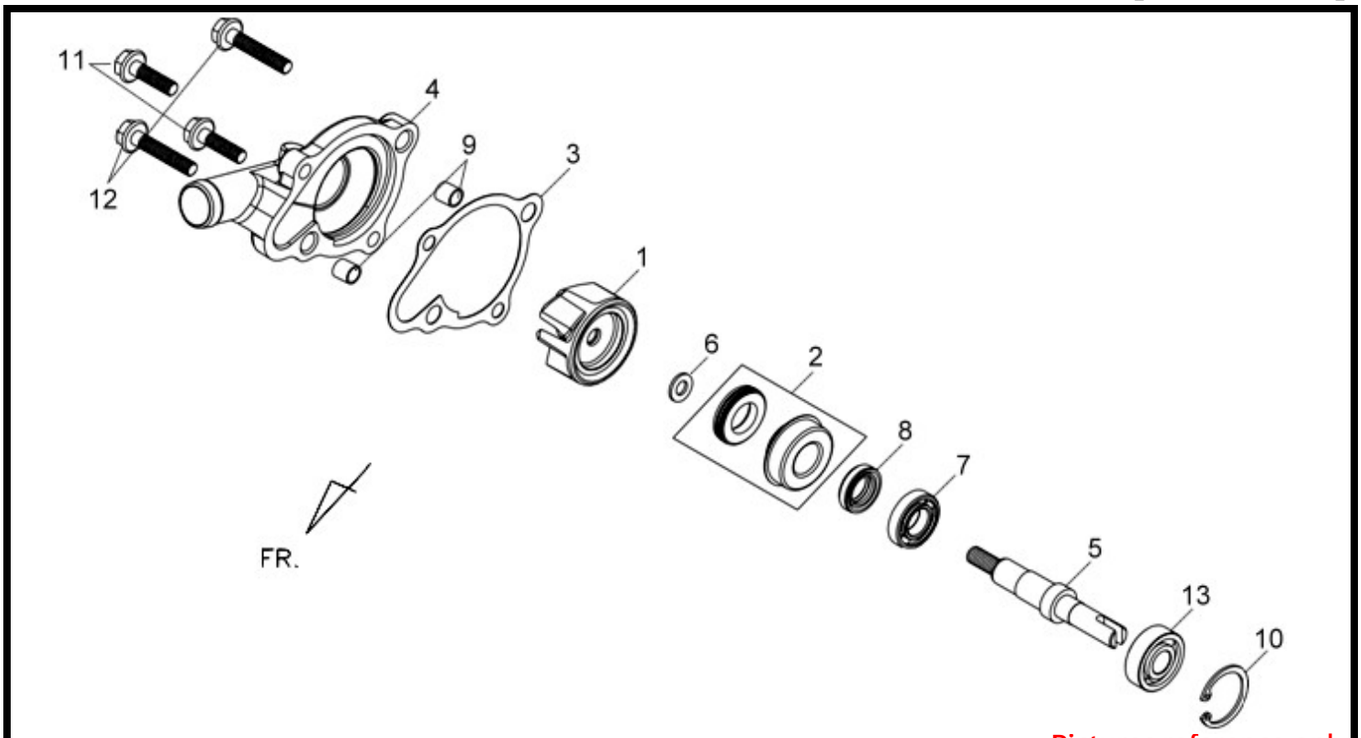

Pictures reference only

	PARTS NUMBER	DESCRIPTION	QTY	EFFECTIVE DATE	
1	19215-HLA-000	WATER PUMP IMPELLER	1		
2	19217-H9A-300	MECHANICAL SEAL	1		
3	19229-H9A-000	WATER PUMP GASKET	1		
4	1922A-BAA-000	WATER PUMP COVER COMP	1		
5	19231-BAA-000	WATER PUMP SHAFT	1		
6	90423-KJ9-000	WASHER 7.2X13X1.2	1		
7	91001-KJ9-005	RADIAL BALL BRG.6901	1		
8	91205-KF0-003	OIL SEAL 12X20X5	1		
9	94301-08140	DOWEL PIN 8X14	2		
10	94520-26000	CIRCLIP IN 26MM	1		
11	96001-06022-08	FLANGE BOLT SH 6X22	2		
12	96001-06032-07	FLANGE BOLT SH 6X32	2		
13	96100-60000-00	RADIAL BALL BRG. 6000CM	1		

※ Please check the color & stripe information according to the color index ! **TEAMWORLD IND. 2011.09**

※N/A = SUBSTITUTE ※Y = EXCHANGEABLE ※N =NOT EXCHANGEABLE

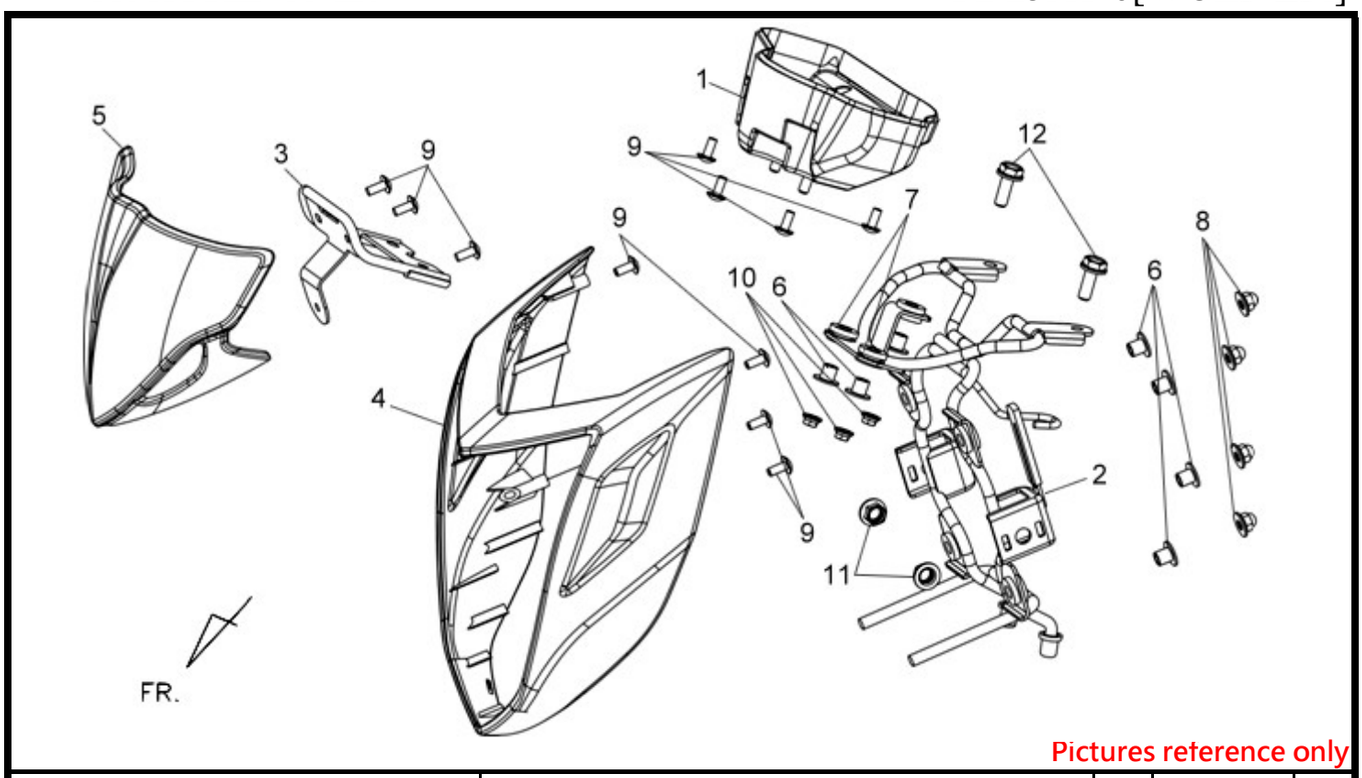

Pictures reference only

	PARTS NUMBER	DESCRIPTION	QTY	EFFECTIVE DATE	
1	37210-B9A-000-IL	SPEEDOMETER CASE.GY-7450U	1		
2	5031B-B7A-000	HEAD BRKT ASSY	1		
3	53201-B9A-000	VISOR STAY	1		
4	53205-B9A-000-IL	FR. HANDLE COVER GY-7450U	1		
5	53207-B9A-000-H1GE	METER VISOR A GY-010UL	1		
5	53207-B9A-000-H1KB	METER VISOR A BK-001C	1		
5	53207-B9A-000-H1QU	METER VISOR A WH-300P	1		
5	53207-B9A-000-H1YR	METER VISOR A Y-116C	1		
5	53207-B9A-000-CA	METER VISOR A BU-2935U	1		
5	53207-B9A-000-H1XJ	METER VISOR A R-187UL	1		
6	61201-B9A-000	FR. FENDER COLLAR	7		
7	64304-B9A-000	FR.COVER RUBBER	4		
8	90301-M9Q-800	OPEN STAY NUT 6MM	4		
9	93903-25280	TAPPING SCREW 5X12	11		
10	94050-06070	FLANGE NUT 6MM	3		
11	94050-10070	FLANGE NUT 10mm	2		
12	95801-06016-07	FLANGE BOLT 6X16	2		

※ Please check the color & stripe information according to the color index **TEAMWORLD IND. 2011.09**

※N/A = SUBSTITUTE ※Y = EXCHANGEABLE ※N =NOT EXCHANGEABLE

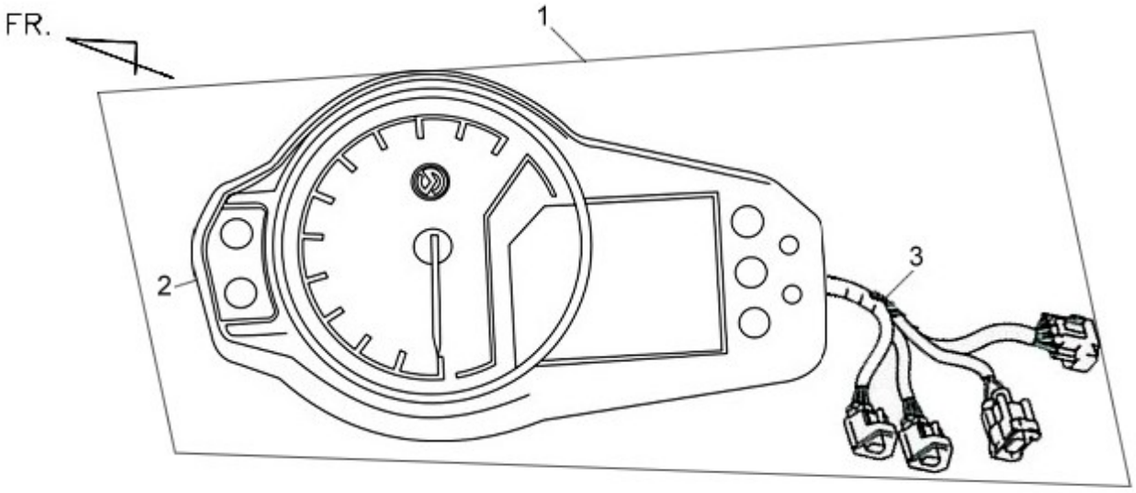

Pictures reference only

	PARTS NUMBER	DESCRIPTION	QTY	EFFECTIVE DATE	
1	37200-BAC-010	SPEEDOMETER ASSY	1		
2	37211-BAA-000	METER LENS	1		
3	37224-BAA-010	METER CORD COMP	1		

※ Please check the color & stripe information according to the color index ! **TEAMWORLD IND. 2011.0**

※N/A = SUBSTITUTE ※Y = EXCHANGEABLE ※N =NOT EXCHANGEABLE

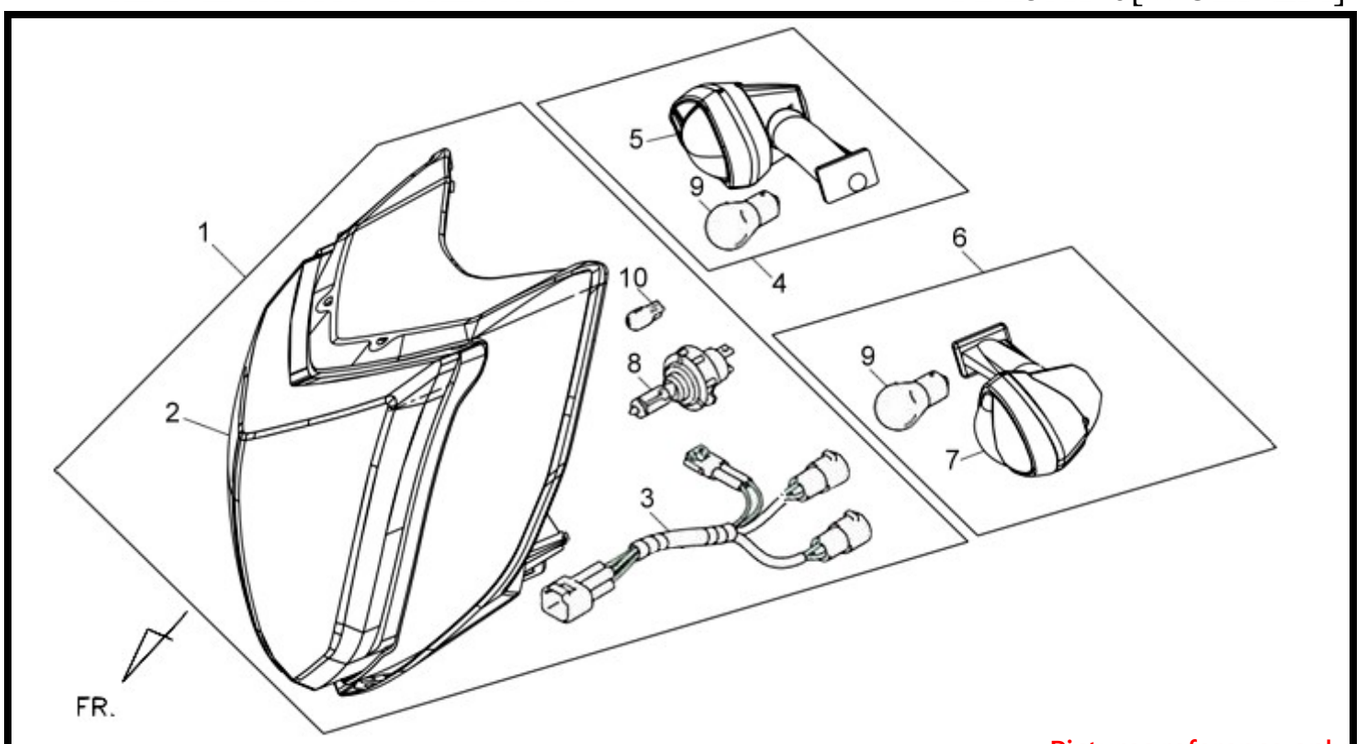

Pictures reference only

	PARTS NUMBER	DESCRIPTION	QTY	EFFECTIVE DATE	
1	33100-BAA-000	HEAD LIGHT ASSY	1		
2	33120-BAA-000	HEAD LIGHT UNIT	1		
3	33130-B9A-000	HEAD LIGHT SOCKET COMP	1		
4	33400-BAA-000	FR. R. WINKER ASSY	1		
5	33405-B7A-000	FR.R WINKER LENS COMP	1		
6	33450-BAA-000	FR. L. WINKER ASSY	1		
7	33455-B7A-000	FR.L WINKER LENS COMP	1		
8	34901-H9G-000	HEAD LIGHT BULB	1		
9	34905-A8D-000	WINKER BULB(12V10W E MARK)	2		
10	34908-M9Q-100	POSITION BULB 12V-5W (E)	1		

※ Please check the color & stripe information according to the color index ! **TEAMWORLD IND. 2011.09**

※N/A = SUBSTITUTE ※Y = EXCHANGEABLE ※N =NOT EXCHANGEABLE

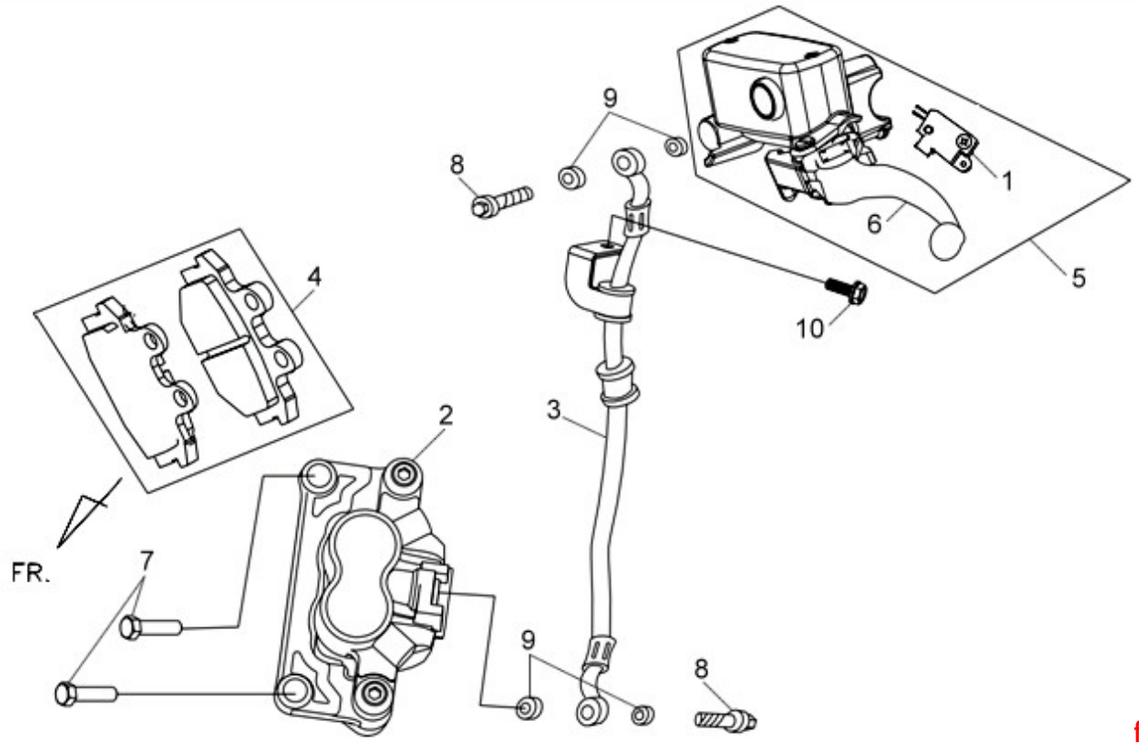

ference only

	PARTS NUMBER	DESCRIPTION	QTY	EFFECTIVE DATE	
1	45514-L4A-300	FR/RR.STOP SW.	1		
2	45100-BAA-000-DM	FR.CALIPER ASSY GD-7403S	1		
3	45126-BAA-000	FR. BRAKE HOSE ASSY	1		
4	45130-BAA-300-A	RH.FR.PAD ASSY	1		
5	45500-BAA-000	FR.M/C ASSY	1		
6	45509-L4A-300	R.HANDLE LEVER SET	1		
7	90102-L4A-000	SOCKET BOLT 10*65	2		
8	90145-MS9-611	OIL BOLT 10X22	2		
9	90545-M9Q-000	OIL BOLT WASHER	4		
10	95801-06012-07	FLANGE BOLT 6X12	6		

※ Please check the color & stripe information according to the color index ! **TEAMWORLD IND. 2011.0**

※N/A = SUBSTITUTE ※Y = EXCHANGEABLE ※N =NOT EXCHANGEABLE

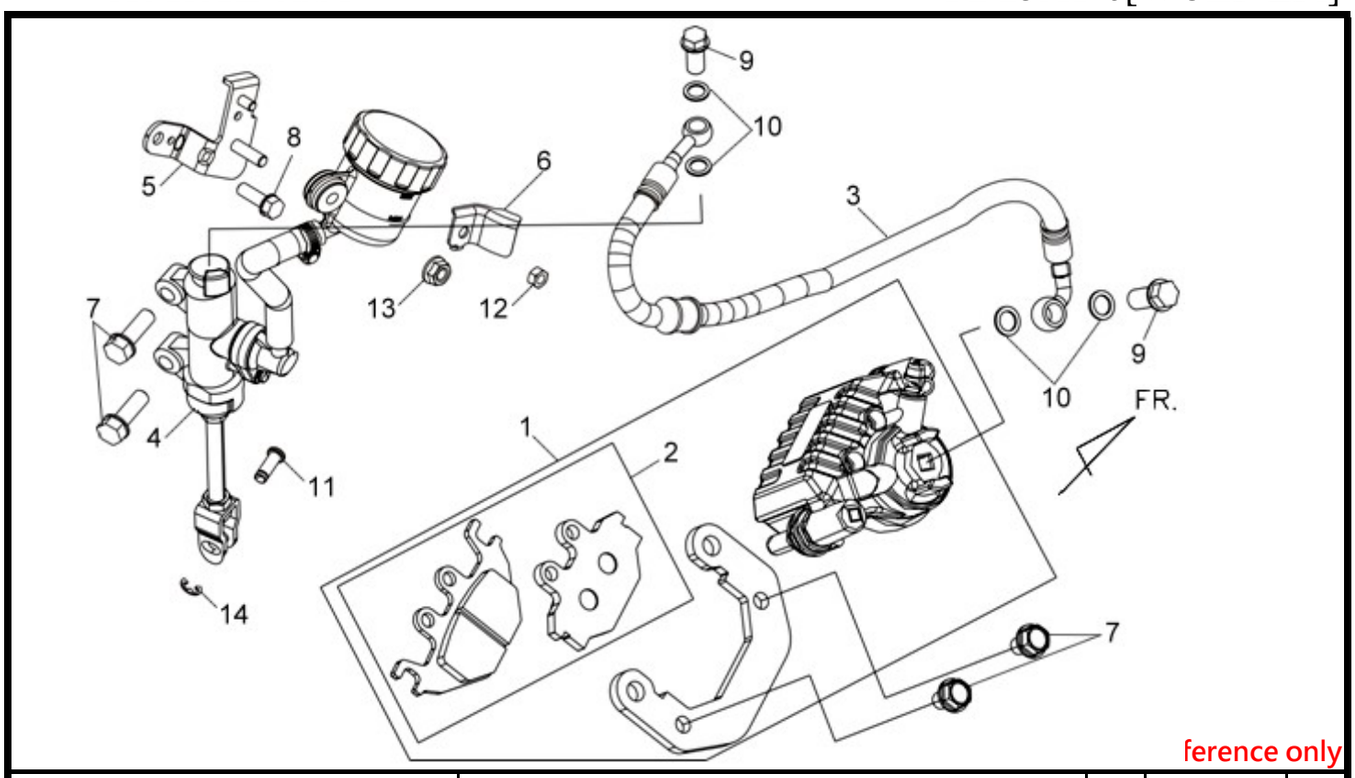

ference only

	PARTS NUMBER	DESCRIPTION	QTY	EFFECTIVE DATE	
1	43100-BAA-000-DM	RR.CALIPER ASSY GD-7403S	1		
2	43108-BAA-000-A	RR.PAD ASSY	1		
3	43126-B7A-000	RR.BRAKE HOSE ASSY.	1		
4	46500-BAA-000	FOOT MASTER CYLINDER ASSY	1		
5	46501-B7A-000	BRAKE CUP STAY COMP	1		
6	46502-B7A-000	BRAKE TANK CUP STAY COMP	1		
7	90106-B7A-000	FLANGE BOLT 8X25	4		
8	90107-B7A-000	FLANGE BOLT 6X16	1		
9	90145-M9Q-000	OIL BOLT 10X22	2		
10	90545-M9Q-000	OIL BOLT WASHER	4		
11	91510-BAA-000	STEP PIN	1		
12	94001-05070-0S	HEX NUT 5MM	1		
13	94050-06070	FLANGE NUT 6MM	1		
14	94540-05017	E RING 5	1		

※ Please check the color & stripe information according to the color index ! **TEAMWORLD IND. 2011.09**

※N/A = SUBSTITUTE ※Y = EXCHANGEABLE ※N =NOT EXCHANGEABLE

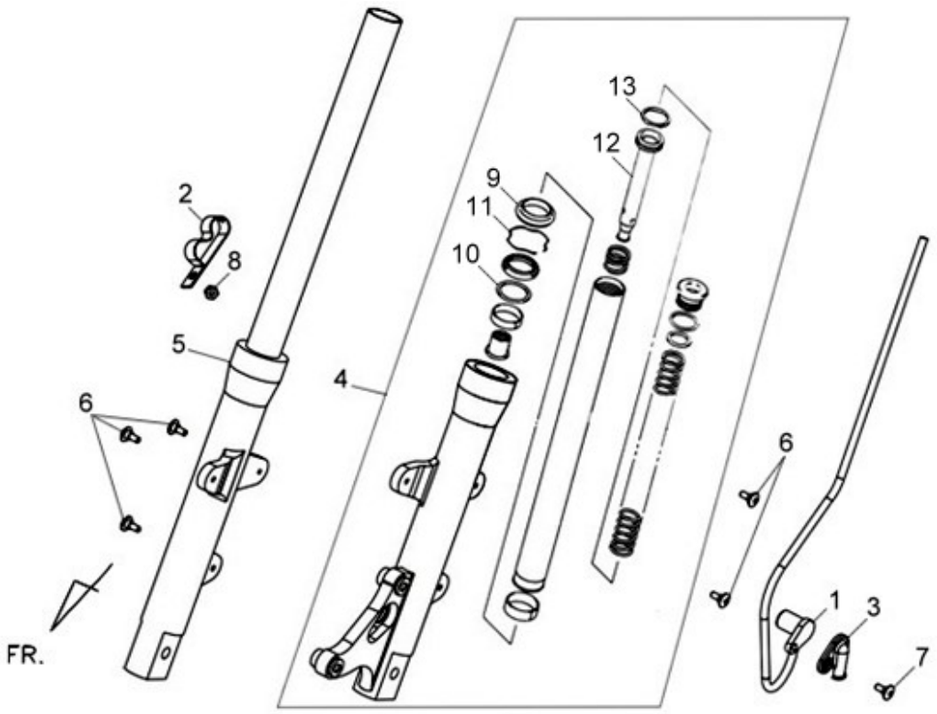

Pictures reference only

	PARTS NUMBER	DESCRIPTION	QTY	EFFECTIVE DATE	
1	44800-BAA-000	SPDMT.SENSOR ASSY	1		
2	45156-B9A-000	BRAKE HOSE CLAMP	1		
3	51106-BAA-000	SPDMT SENSOR COVER	1		
4	51400-BAA-010	R FR CUSHION ASSY	1		
5	51500-BAA-010	L FR CUSHION ASSY	1		
6	90164-MR4-900	SCREW SPECIAL 6X16.5	6		
7	93893-06016-07	SCREW WASHER	1		
8	94002-06020-0S	HEX NUT 6MM	1		
9	91256-BAA-000	DUST COVER	2		
10	B9A-MF530-00	OIL SEAL	2		
11	B9A-MF535-00	OIL SEAL RING CLASP	2		
12	B9A-MF600-00	SCREW INSIDE	2		
13	B9A-MF605-00	INSIDE TUBE ORING	2		

※ Please check the color & stripe information according to the color index !

TEAMWORLD IND. 2011

※N/A = SUBSTITUTE ※Y = EXCHANGEABLE ※N =NOT EXCHANGEABLE

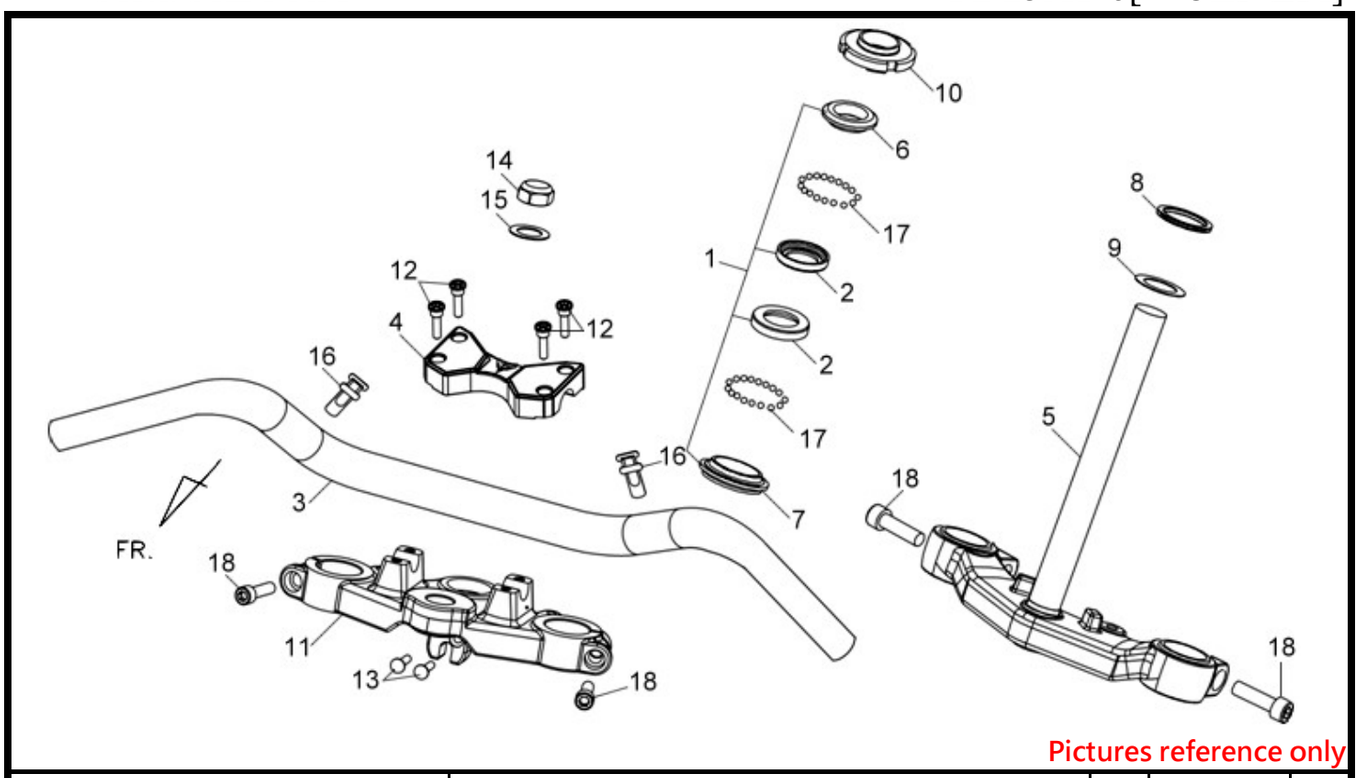

Pictures reference only

	PARTS NUMBER	DESCRIPTION	QTY	EFFECTIVE DATE	
1	50300-BAA-000	BALL RACE SET	1		
2	50301-BAA-000	STRG. BALL RACE □	2		
3	53100-BAA-000-IS	STEERING HANDLE PIPE GY-429U	1		
4	53131-BAA-010-OE	HNDL. PIPE UPPER HOLDER S-877U	1		
5	53200-BAA-000	STEERING STEM COMP	1		
6	53211-BAA-000	STRG. TOP CONE RACE	1		
7	53212-BAA-000	STRG. BOTTOM CONE RACE	1		
8	53214-001-010	STEERING HEAD DUST SEAL	1		
9	53215-001-000	STRG HD. DUST SEAL WASHER	1		
10	53220-N02-000	STEERING HEAD THREAD COMP	1		
11	53231-B9A-000-IL	FORK TOP BRIDGE GY-7450U	1		
12	90116-BAA-000	SPECIAL BOLT 6MM	4		
13	90164-B9A-000	LOCK FLAT SCREW	2		
14	90304-L4A-000	STEERING STEM NUT	1		
15	90503-B06-000	STEERING STEM NUT WASHER	1		
16	95014-62200	WIRE BAND B2	2		
17	96211-06000	STEEL BALL #6(4.763MM 3/16")	42		
18	96700-B9A-000	SOCKER BOLT 10X35	4		

※ Please check the color & stripe information according to the color index

※N/A = SUBSTITUTE ※Y = EXCHANGEABLE ※N =NOT EXCHANGEABLE

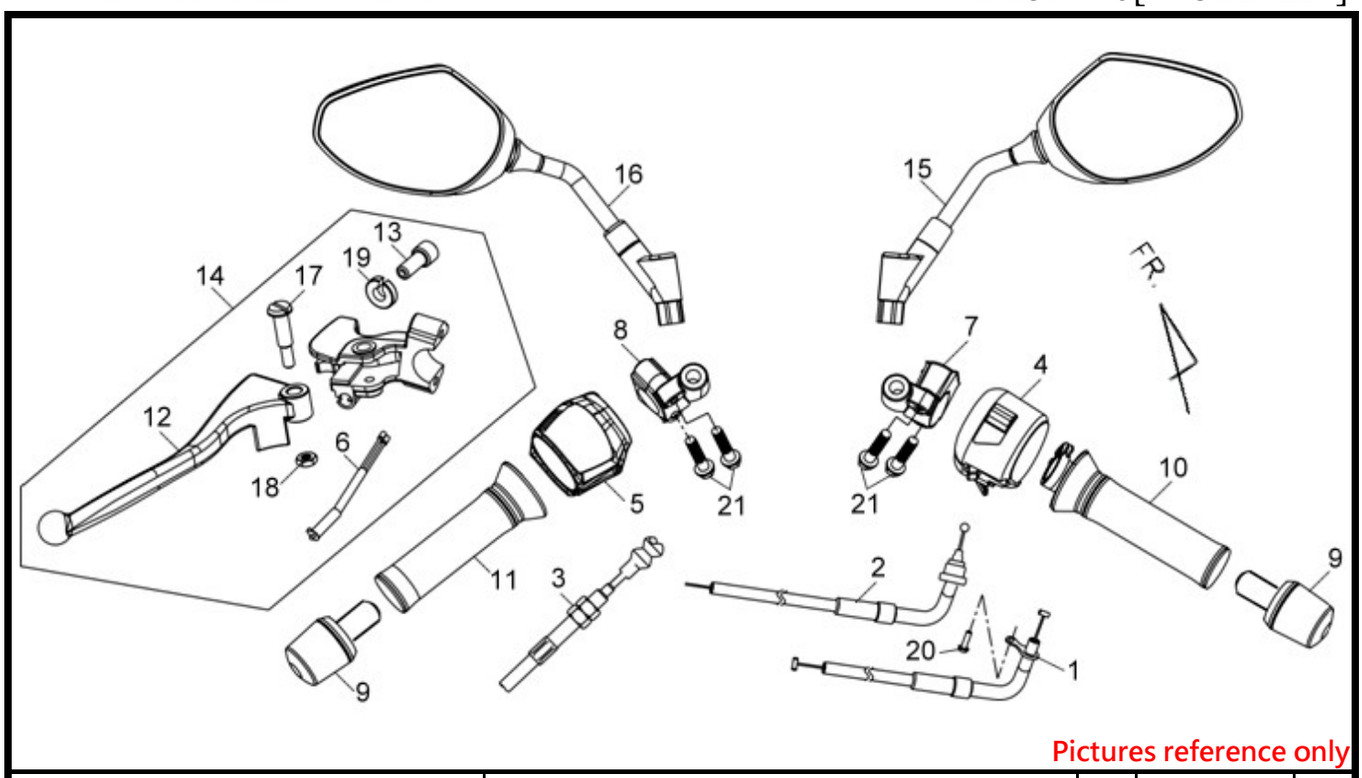

Pictures reference only

	PARTS NUMBER	DESCRIPTION	QTY	EFFECTIVE DATE	
1	17910-BAA-000	THROTTLE CABLE COMP	1		
2	17920-BAA-000	THROTTLE CABLE B	1		
3	22870-BAA-000	CLUTCH CABLE COMP	1		
4	35150-BAA-000	R HANDLE SW ASSY	1		
5	35200-B9A-000	L HANDLE SW.ASSY	1		
6	35330-BAA-000	CLUTCH SW.ASSY	1		
7	45517-BAA-000	RH. M/C HOLDER.	1		
8	45518-BAA-000	LH. M/C HOLDER	1		
9	53104-BAA-000-IL	HANDLE PIPE WT ASSY GY-745U	2		
10	53140-HMA-000	THROT. GRIP COMP	1		
11	53166-N02-000	L HANDLE GRIP	1		
12	53190-BAA-000	L.STEERING HNDL.LEVER	1		
13	53192-203-900	CLUTCHWIRE ADJUST BOLT-NUT	1		
14	5319A-BAA-010	HNDL.L LEVER BRKT.SET	1		
15	88110-B9A-000	RH. BACK MIRROR ASSY	1		
16	88120-B9A-000	LH. BACK MIRROR ASSY	1		
17	90136-BAA-000	HANDLE LEVER PIVOT BOLT	1		
18	90306-BAA-000	U NUT 6MM	1		
19	90321-315-900	FIXING NUT	1		
20	93891-05012-07	WASHER SCREW 5X12	1		
21	95701-06020-07	FLANGE BOLT 6X20	4		

※ Please check the color & stripe information according to the color index ! **TEAMWORLD IND. 2011.09**

※N/A = SUBSTITUTE ※Y = EXCHANGEABLE ※N =NOT EXCHANGEABLE

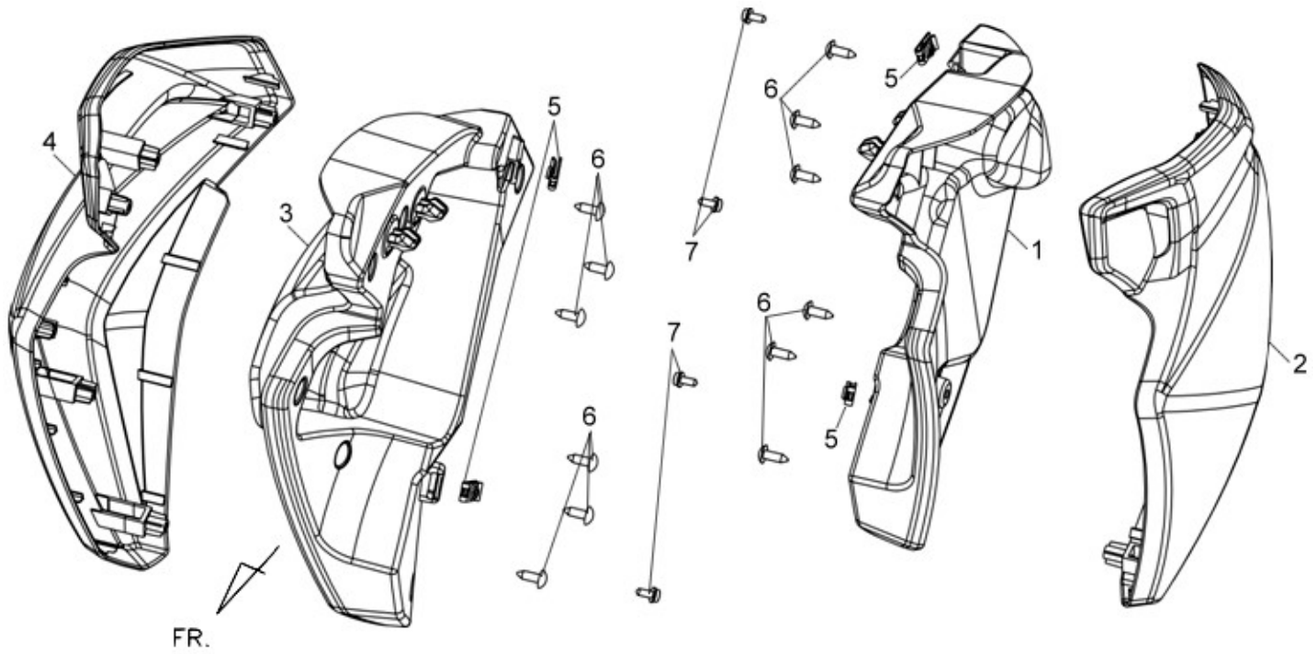

Pictures reference only

	PARTS NUMBER	DESCRIPTION	QTY	EFFECTIVE DATE	
1	64303-BAA-000	R FR INNER COVER	1		
2	64301-BAA-000-GE1	R FR COVER GY-010UL	1		
2	64301-BAA-000-KB1	R FR COVER BK-001C	1		
2	64301-BAA-000-QU1	R FR COVER WH-300P	1		
2	64301-BAA-000-YR1	R FR COVER Y-116C	1		
2	64301-BAA-000-CA1	R FR COVER BU-2935U	1		
2	64301-BAA-000-XJ1	R FR COVER R-187UL	1		
3	64403-BAA-000	L FR INNER COVER	1		
4	64401-BAA-000-GE1	L FR COVER GY-010UL	1		
4	64401-BAA-000-KB1	L FR COVER BK-001C	1		
4	64401-BAA-000-QU1	L FR COVER WH-300P	1		
4	64401-BAA-000-YR1	L FR COVER Y-116C	1		
4	64401-BAA-000-CA1	L FR COVER BU-2935U	1		
4	64401-BAA-000-XJ1	L FR COVER R-187UL	1		
5	90308-X04-000	SPECIAL NUT 5MM	2		
6	93903-25280	TAPPING SCREW 5X12	12		
7	93903-45480	TAPPING SCREW 5X20	4		

※ Please check the color & stripe information according to the color indi **TEAMWORLD IND. 2011.09**

※N/A = SUBSTITUTE ※Y = EXCHANGEABLE ※N =NOT EXCHANGEABLE

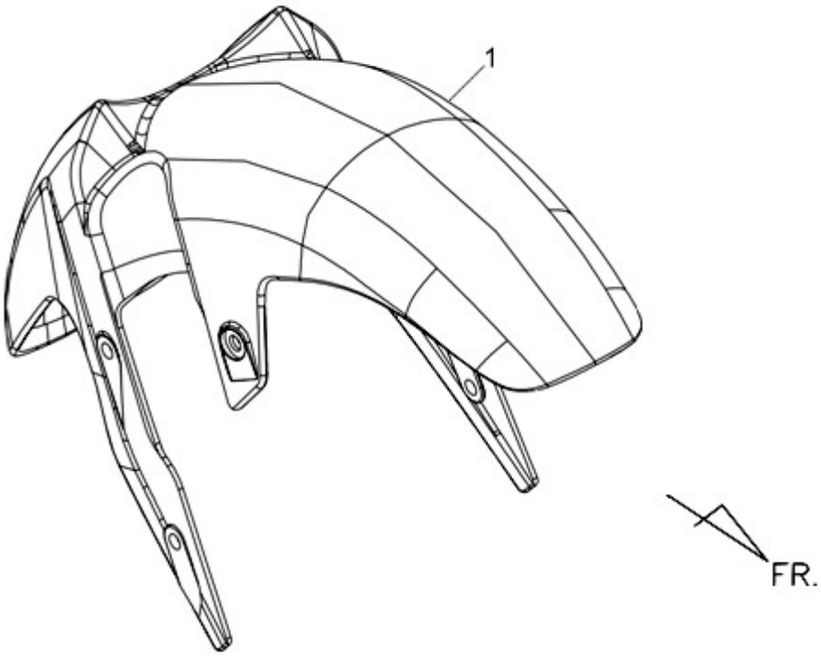

Pictures reference only

	PARTS NUMBER	DESCRIPTION	QTY	EFFECTIVE DATE	
1	61100-B9A-000-GE	FR FENDER GY-010UL	1		
1	61100-B9A-000-KB	FR FENDER BK-001C	1		
1	61100-B9A-000-QU	FR FENDER WH-300P	1		
1	61100-B9A-000-YR	FR FENDER Y-116C	1		
1	61100-B9A-000-CA	FR FENDER BU-2935U	1		
1	61100-B9A-000-XJ	FR FENDER R-187UL	1		

※ Please check the color & stripe information according to the color index **TEAMWORLD IND. 2011.09**

※N/A = SUBSTITUTE ※Y = EXCHANGEABLE ※N =NOT EXCHANGEABLE

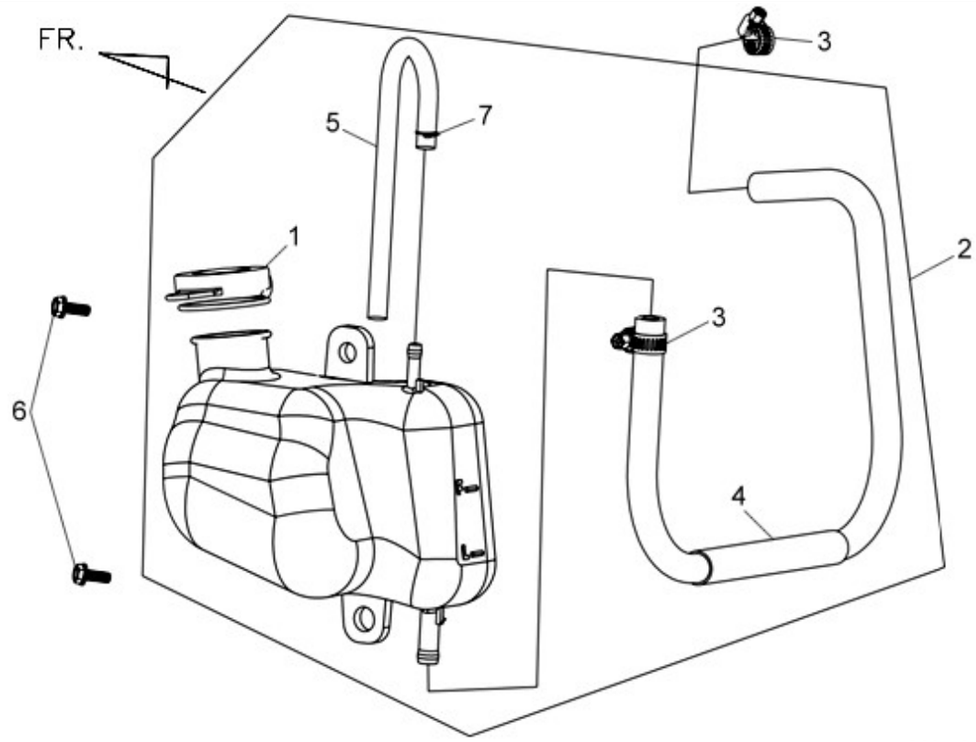

s reference only

	PARTS NUMBER	DESCRIPTION	QTY	EFFECTIVE DATE	
1	19104-MBO-700	RESERVE TANK CAP.	1		
2	1910A-BAA-000	RESERVE TANK ASSY	1		
3	19505-H5D-900	HOSE CLAMP	2		
4	19507-BAA-000	RES.TANK WATER TUBE A	1		
5	19509-BAA-000	RES.TANK WATER TUBE B	1		
6	90111-M9Q-900	FLANGE BOLT(MFZn2-C)6MM	2		
7	95002-02080	BREATHER TUBE CLIP B8	1		

※ Please check the color & stripe information according to the color index ! **TEAMWORLD IND. 2011.0**

※N/A = SUBSTITUTE ※Y = EXCHANGEABLE ※N =NOT EXCHANGEABLE

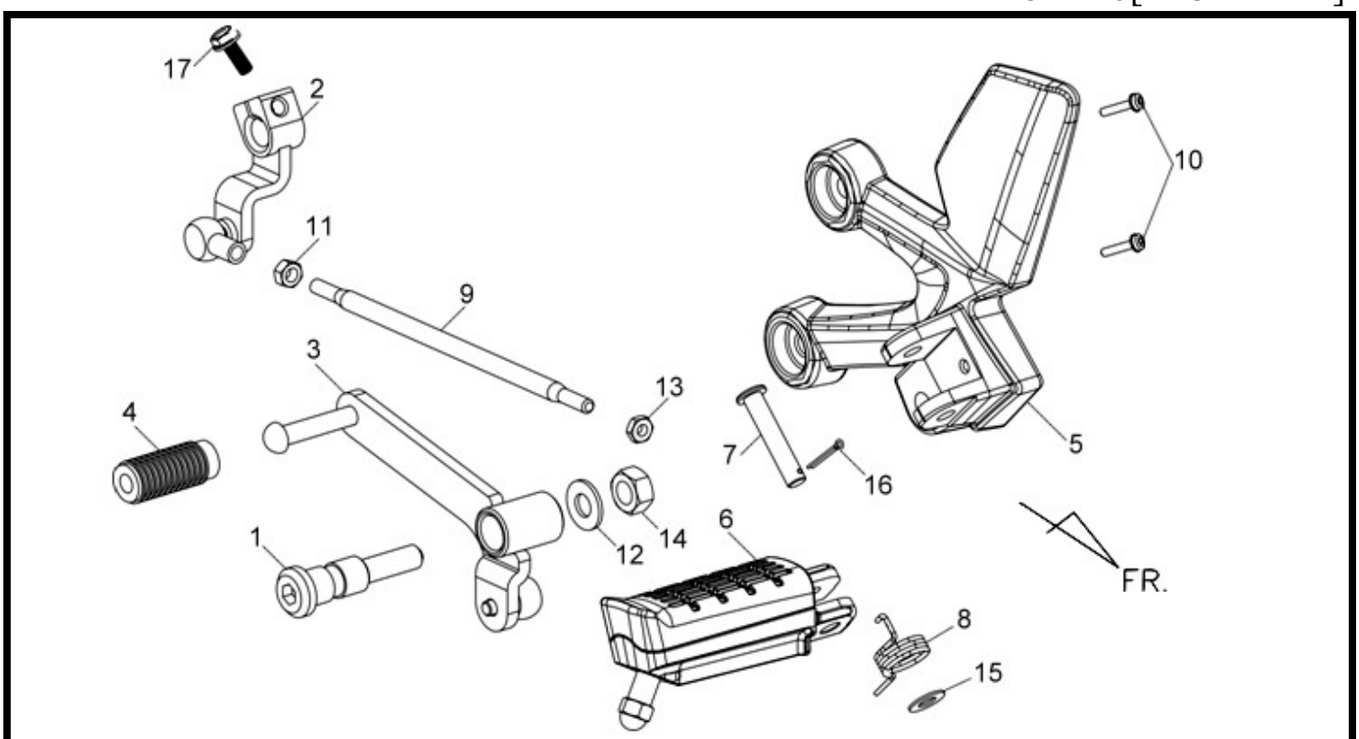

Pictures reference only

	PARTS NUMBER	DESCRIPTION	QTY	EFFECTIVE DATE	
1	24702-B9A-000	GEAR CHANGE BOLT	1		
2	2470A-B9A-000	GEAR CHANGE ARM COMP	1		
3	2470B-B9A-000	GEAR CHANGE PEDAL COMP	1		
4	24781-205-000	CHANGE PEDAL RUBBER	1		
5	50617-B9A-000-IS	L STEP HOLDER GY-429U	1		
6	5061C-B9A-000	FR L STEP BAR ASSY	1		
7	50603-B9A-000	FR STEP BAR JOINT PIN	1		
8	50644-B9A-000	L FR STEP RETURN SPRING	1		
9	90065-BAA-000	TIE ROD BOLT	1		
10	90106-B9A-900	SPECIAL BOLT 8MM	2		
11	90201-N02-000	NUT 6MM	1		
12	91104-B9A-000	PLAIN WASHER 10MM	1		
13	94002-06020-0S	HEX NUT 6MM	1		
14	94050-10080	FLANGE NUT 10MM	1		
15	94102-08800	PLAIN WASHER 8mm	1		
16	94201-16200	SPLIT PIN 1.6X20	1		
17	95801-06022-00	FLANGE BOLT 6X22	1		

※ Please check the color & stripe information according to the color index **TEAMWORLD IND. 2011.09**

※N/A = SUBSTITUTE ※Y = EXCHANGEABLE ※N =NOT EXCHANGEABLE

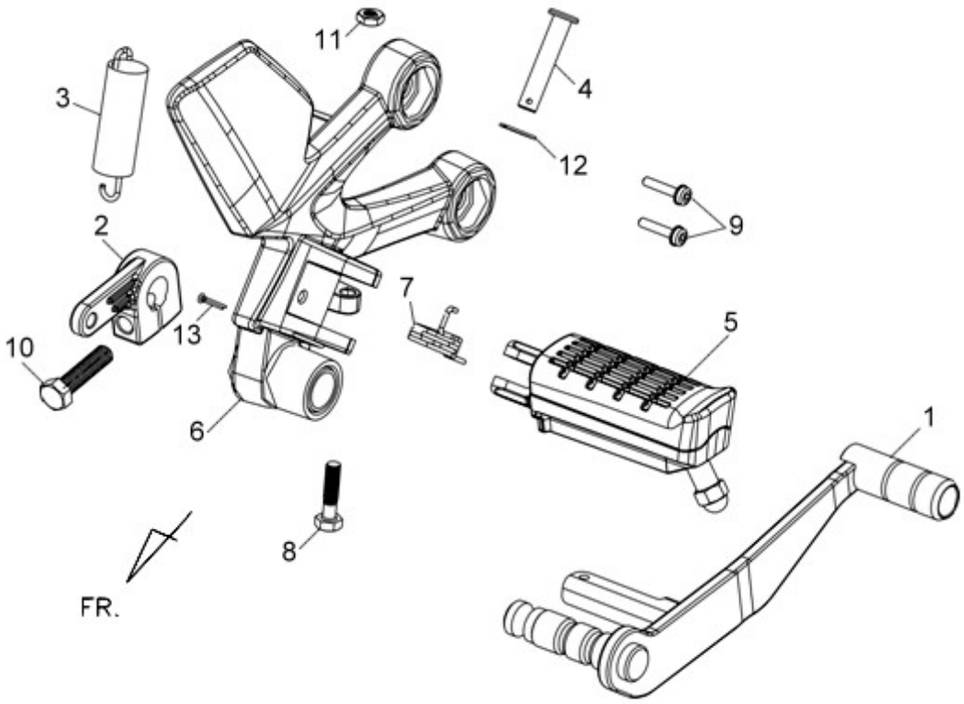

Pictures reference only

	PARTS NUMBER	DESCRIPTION	QTY	EFFECTIVE DATE	
1	46500-B9A-000	RR BRAKE PEDAL. S-881S	1		
2	46515-B7A-900	RR BRAKE MIDDLE ARM	1		
3	4651A-B7A-000	RR BRK.PEDAL SPG ASSY	1		
4	50603-B9A-000	FR STEP BAR JOINT PIN	1		
5	5061B-B9A-000	FR R STEP BAR ASSY	1		
6	5061D-BAA-000-IS	R STEP HOLDER COMP (GY-429U)	1		
7	50634-B9A-000	R FR STEP RETURN SPRING	1		
8	90103-B9A-000	BOLT M6X25	1		
9	90106-B9A-900	SPECIAL BOLT 8MM	2		
10	90106-H21-000	FLANGE BOLT 8X32	1		
11	94001-06000-0S	HEX NUT 6MM	1		
12	94102-08800	PLAIN WASHER 8mm	1		
13	94201-16200	SPLIT PIN 1.6X20	1		

※ Please check the color & stripe information according to the color index ! **TEAMWORLD IND. 2011.0**

※N/A = SUBSTITUTE ※Y = EXCHANGEABLE ※N =NOT EXCHANGEABLE

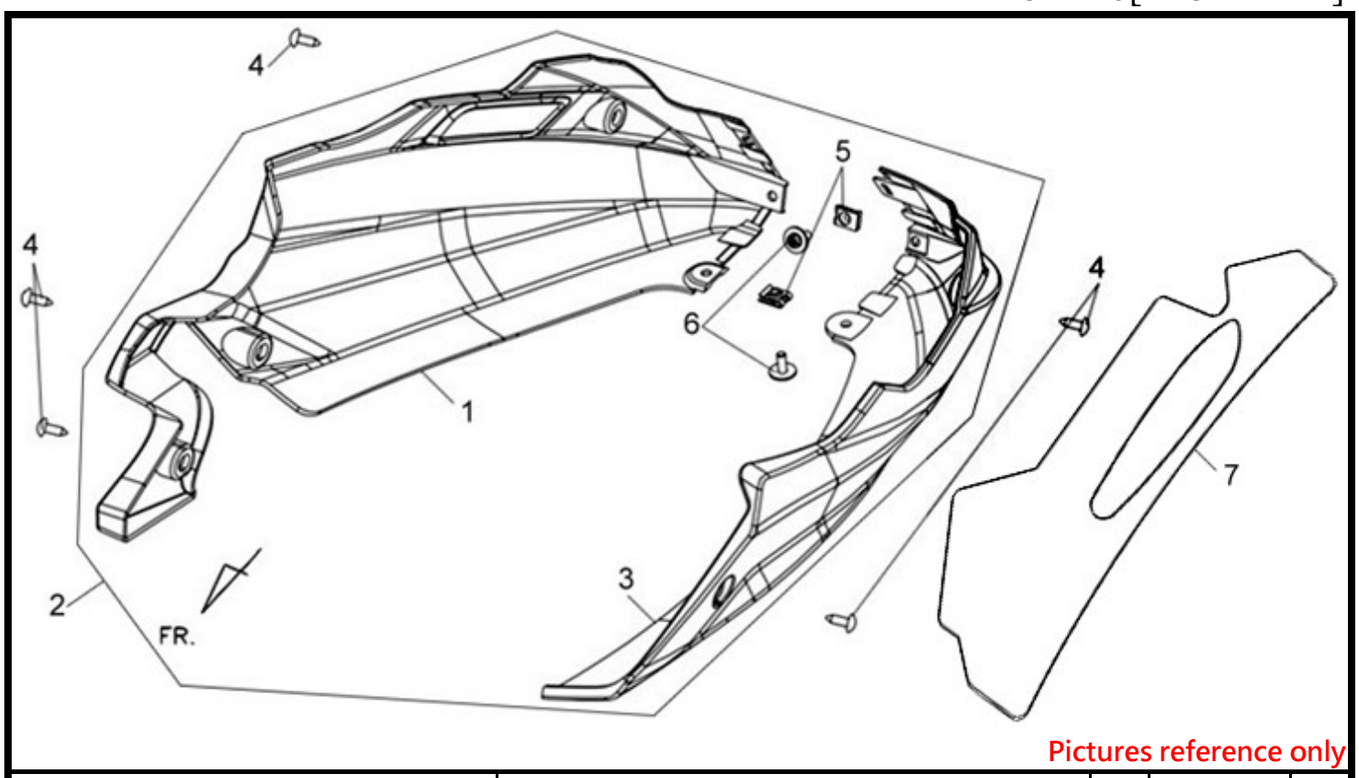

Pictures reference only

	PARTS NUMBER	DESCRIPTION	QTY	EFFECTIVE DATE	
1	64310-BAA-000-GE	R UNDER SPOILER GY-010UL	1		
1	64310-BAA-000-KB	R UNDER SPOILER BK-001C	1		
1	64310-BAA-000-QU	R UNDER SPOILER WH-300P	1		
1	64310-BAA-000-YR	R UNDER SPOILER Y-116C	1		
1	64310-BAA-000-CA	R UNDER SPOILER BU-2935U	1		
1	64310-BAA-000-XJ	R UNDER SPOILER R-187UL	1		
2	6440A-BAA-000-GE	UNDER SPOILER ASSY. GY-010UL	1		
2	6440A-BAA-000-KB	UNDER SPOILER ASSY. BK-001C	1		
2	6440A-BAA-000-QU	UNDER SPOILER ASSY. WH-300P	1		
2	6440A-BAA-000-YR	UNDER SPOILER ASSY. Y-116C	1		
2	6440A-BAA-000-CA	UNDER SPOILER ASSY. BU-2935U	1		
2	6440A-BAA-000-XJ	UNDER SPOILER ASSY. R-187UL	1		
3	64410-BAA-000-GE	L UNDER SPOILER GY-010UL	1		
3	64410-BAA-000-KB	L UNDER SPOILER BK-001C	1		
3	64410-BAA-000-QU	L UNDER SPOILER WH-300P	1		
3	64410-BAA-000-YR	L UNDER SPOILER Y-116C	1		
3	64410-BAA-000-CA	L UNDER SPOILER BU-2935U	1		
3	64410-BAA-000-XJ	L UNDER SPOILER R-187UL	1		
4	90110-H6T-000	SCREW SPECIAL 6X14	5		
5	90677-GR1-003	CLIP NUT 5X0.8	2		
6	93894-05014-07	WASH BOLT 5*14	2		
7	64315-BAA-000	HEAT PROOF PANEL	1		

※ Please check the color & stripe information according to the color index ! **TEAMWORLD IND. 2011.09**

※N/A = SUBSTITUTE ※Y = EXCHANGEABLE ※N =NOT EXCHANGEABLE

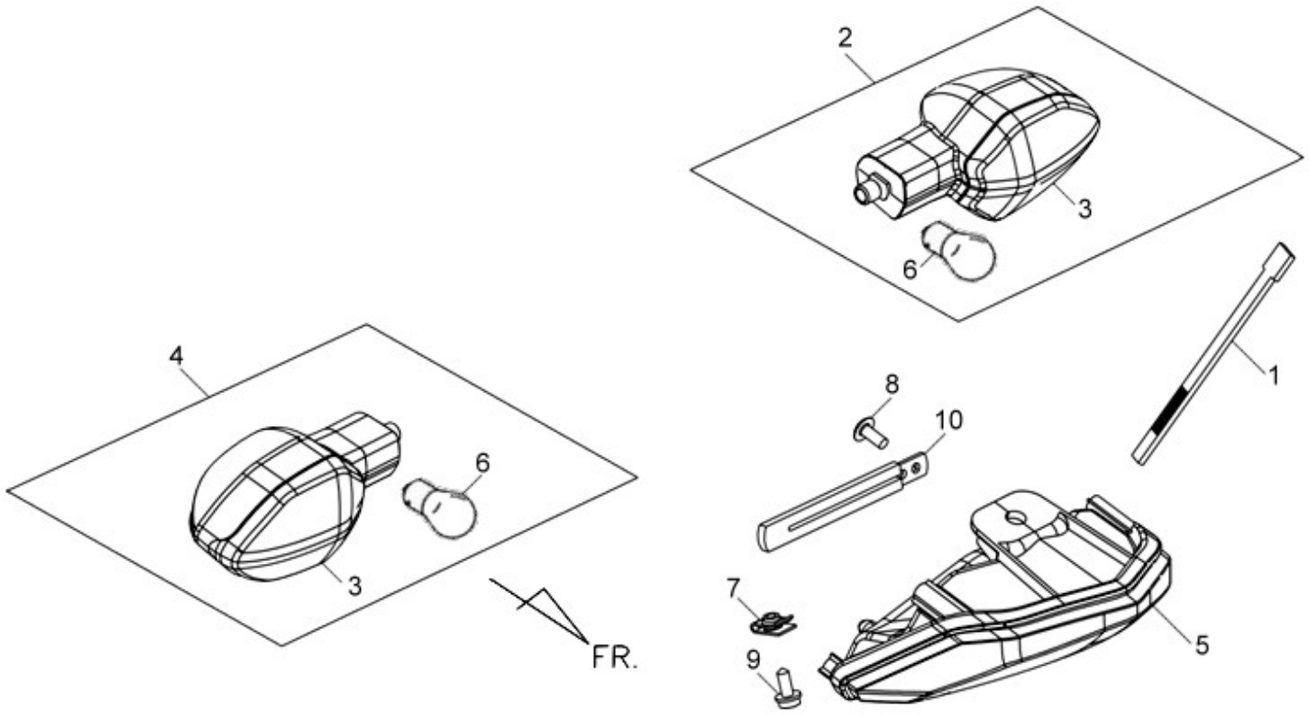

Pictures reference only

	PARTS NUMBER	DESCRIPTION	QTY	EFFECTIVE DATE	
1	32161-T15-000	BAND 250	1		
2	33600-B9A-000	RR R WINKER ASSY	1		
3	33610-B9A-000	RR.R/L WINKER UNIT	2		
4	33650-B9A-000	RR L WINKER ASSY	1		
5	33700-B9A-000	TAIL LIGHT ASSY	1		
6	34905-A8D-000	WINKER BULB(12V10W E MARK)	2		
7	90308-X04-000	SPECIAL NUT 5MM	1		
8	93903-25220	TAPPING SCREW 5X12	1		
9	93903-25380	TAPPING SCREW 5X16	1		
10	94591-21000	CLIP 2X100	1		

※ Please check the color & stripe information according to the color index ! **TEAMWORLD IND. 2011.09**

※N/A = SUBSTITUTE ※Y = EXCHANGEABLE ※N =NOT EXCHANGEABLE

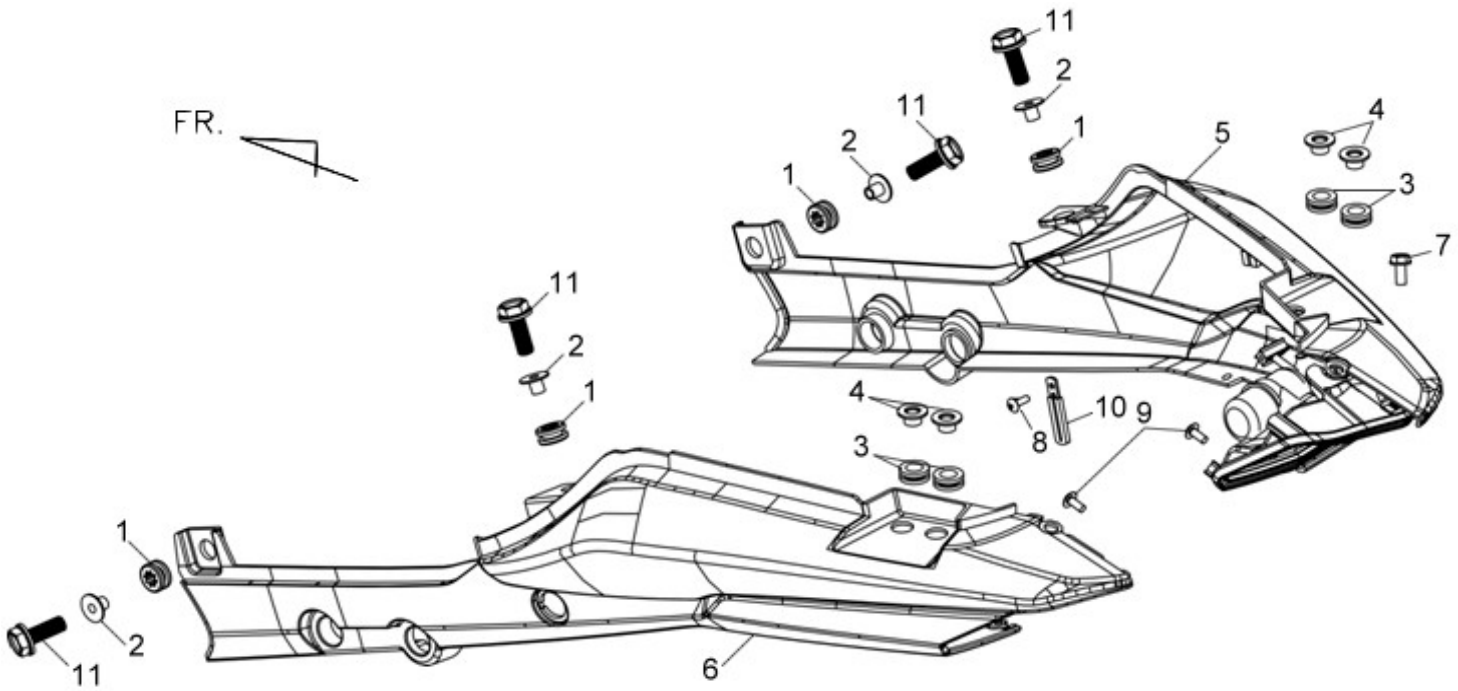

Pictures reference only

	PARTS NUMBER	DESCRIPTION	QTY	EFFECTIVE DATE	
1	64304-X01-000	FR.COVER RUBBER	4		
2	64306-X01-000	FR COVER COLLAR	4		
3	83504-B9A-000	BODY COVER RUBBER	4		
4	83505-B9A-000	BODY COVER COLLAR	4		
5	8366A-BAC-000-GE2	R RR BODY COVER ASSY GY-010UL/GY-7450U	1		
5-1	87128-BAC-000	RR.BODY COVER STRIPE	1		
5	8366A-BAC-000-KB2	R RR BODY COVER ASSY BK-001C/GY-7450U	1		
5-1	87128-BAC-000	RR.BODY COVER STRIPE	1		
5	8366A-BAC-000-QU2	R RR BODY COVER ASSY WH-300P/GY-7450U	1		
5-1	87128-BAC-000	RR.BODY COVER STRIPE	1		
5	8366A-BAC-000-YR2	R RR BODY COVER ASSY Y-116C/GY-7450U	1		
5-1	87128-BAC-000	RR.BODY COVER STRIPE	1		
5	8366A-BAC-000-CA2	R RR BODY COVER ASSY BU-2935U/GY-7450U	1		
5-1	87128-BAC-000	RR.BODY COVER STRIPE	1		
5	8366A-BAC-000-XJ2	R RR BODY COVER ASSY R-187UL/GY-7450U	1		
5-1	87128-BAC-000	RR.BODY COVER STRIPE	1		
6	8367A-BAC-000-GE2	L RR BODY COVER ASSY GY-010UL/GY-7450U	1		
6-1	87128-BAC-000	RR.BODY COVER STRIPE	1		
6	8367A-BAC-000-KB2	L RR BODY COVER ASSY BK-001C/GY-7450U	1		
6-1	87128-BAC-000	RR.BODY COVER STRIPE	1		
6	8367A-BAC-000-QU2	L RR BODY COVER ASSY WH-300P/GY-7450U	1		
6-1	87128-BAC-000	RR.BODY COVER STRIPE	1		
6	8367A-BAC-000-YR2	L RR BODY COVER ASSY Y-116C/GY-7450U	1		
6-1	87128-BAC-000	RR.BODY COVER STRIPE	1		
6	8367A-BAC-000-CA2	L RR BODY COVER ASSY BU-2935U/GY-7450U	1		
6-1	87128-BAC-000	RR.BODY COVER STRIPE	1		
6	8367A-BAC-000-XJ2	L RR BODY COVER ASSY R-187UL/GY-7450U	1		
6-1	87128-BAC-000	RR.BODY COVER STRIPE	1		
7	90118-B9A-900	SPECIAL SCREW 5X14	1		

8	93903-24380	TAPPING SCREW 4X12	1		
9	93903-35180	TAPPING SCREW 5X10	2		
10	94591-25000	CLIP 2X50	1		
11	95801-06020-08	FLANGE BOLT 6X20	4		

※ Please check the color & stripe information according to the color index **TEAMWORLD IND. 2011.09**

※N/A = SUBSTITUTE ※Y = EXCHANGEABLE ※N =NOT EXCHANGEABLE

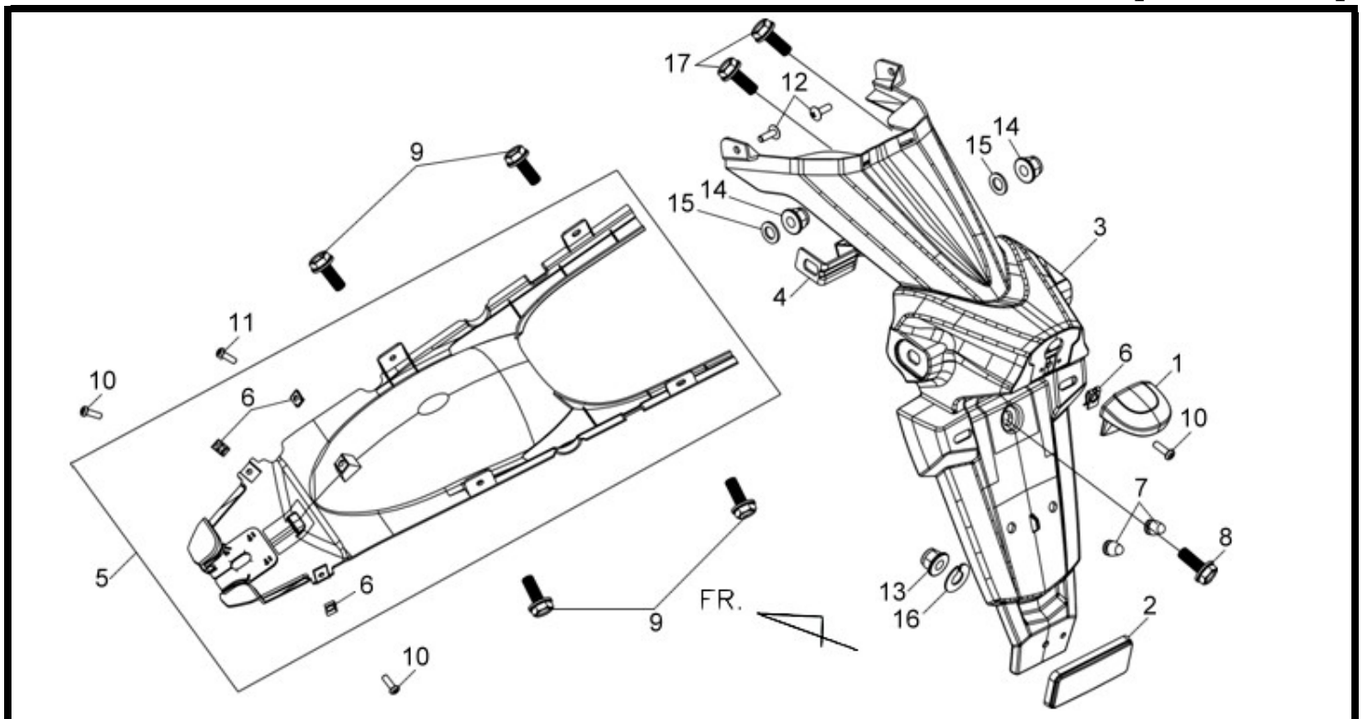

Pictures reference only

	PARTS NUMBER	DESCRIPTION	QTY	EFFECTIVE DATE	
1	33740-T78-010	LICENSE LIGHT ASSY	1		
2	33741-M9A-100	RR. REFLEX REFLECTOR	1		
3	80101-B9A-010	RR FENDER BK-001U	1		
4	80107-B9A-000	RR WINKER STAY	1		
5	8010B-B9A-010	RR FENDER B ASSY BK-001U	1		
6	90308-X04-000	SPECIAL NUT 5MM	4		
7	90899-422-610	CORN. PLUG	2		
8	93404-06012-07	WASHER BOLT 6X12	1		
9	93404-06016-08	BOLT WASHER 6X16	4		
10	93901-25380	TAPPPING SCREW 5X16	3		
11	93903-25320	TAPPING SCREW 5X16	1		
12	93903-25380	TAPPING SCREW 5X16	2		
13	94050-05070	FLANGE NUT 5MM	1		
14	94050-10070	FLANGE NUT 10mm	2		
15	94102-10700	PLAIN WASHER 10MM	2		
16	94111-05800	SPRING WASHER 5MM	1		
17	95801-06012-07	FLANGE BOLT 6X12	6		

※ Please check the color & stripe information according to the color index ! **TEAMWORLD IND. 2011.09**

※N/A = SUBSTITUTE ※Y = EXCHANGEABLE ※N =NOT EXCHANGEABLE

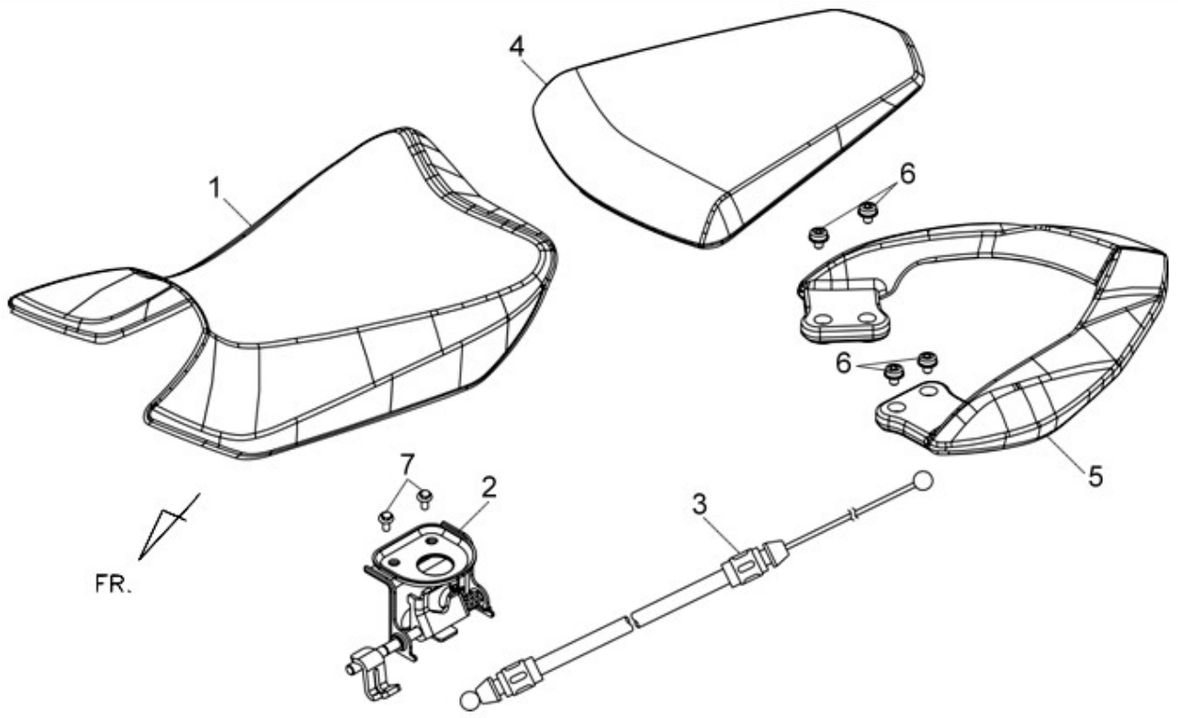

Pictures reference only

	PARTS NUMBER	DESCRIPTION	QTY	EFFECTIVE DATE	
1	7710A-B9A-000	FR SEAT ASSY	1		
2	77230-B9A-000	SEAT CATCH COMP	1		
3	77240-B9A-000	SEAT LOCK CABLE	1		
4	7730A-B9A-001	RR. SEAT ASSY.	1		
5	81300-B9A-000-GE	RR CARRIER GY-010UL	1		
5	81300-B9A-000-KB	RR CARRIER BK-001C	1		
5	81300-B9A-000-QU	RR CARRIER WH-300P	1		
5	81300-B9A-000-YR	RR CARRIER Y-116C	1		
5	81300-B9A-000-CA	RR CARRIER BU-2935U	1		
5	81300-B9A-000-XJ	RR CARRIER R-187UL	1		
6	90106-B9A-000	SPECIAL BOLT 8MM	4		
7	95801-06012-08	FLANGE BOLT 6X12	2		

※ Please check the color & stripe information according to the color index **TEAMWORLD IND. 2011.09**

※N/A = SUBSTITUTE ※Y = EXCHANGEABLE ※N =NOT EXCHANGEABLE

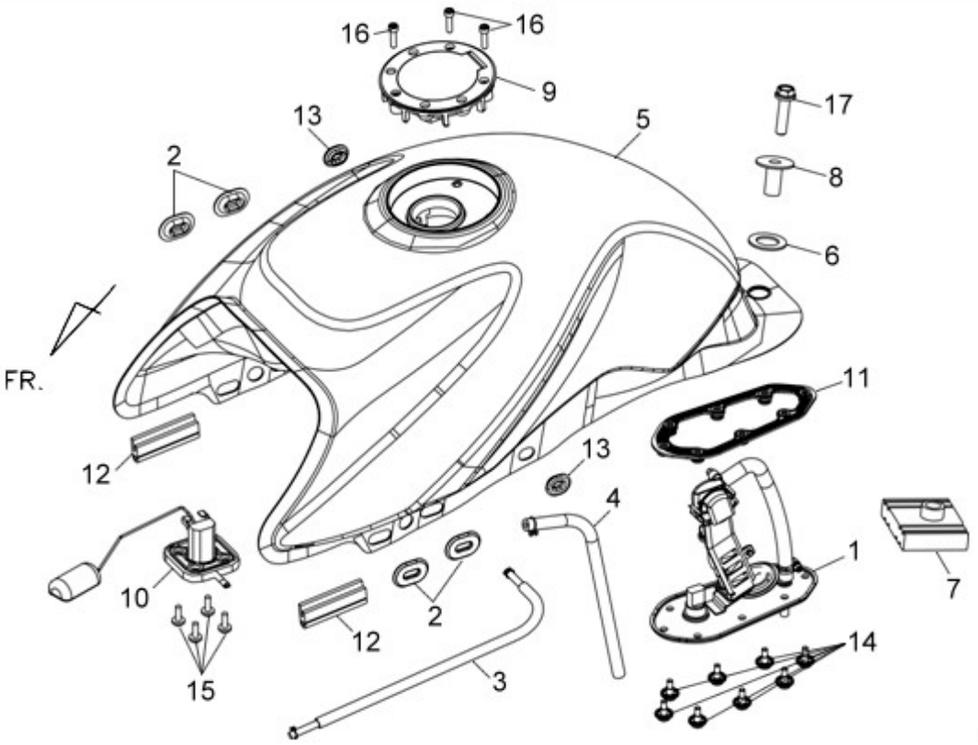

reference only

	PARTS NUMBER	DESCRIPTION	QTY	EFFECTIVE DATE	
1	1670A-BAA-020	FUEL PUMP ASSY	1		
2	17247-B04-000	AIR/C CASE GROMMET A	4		
3	17506-B9A-000	CANI/TANK TUBE ASSY	1		
4	17508-B9A-000	DRAIN HOSE ASSY	1		
5	1751G-BAB-000-GE	FUEL TANK ASSY.GY-010UL	1		
5-1	17511-BAA-000	FUEL TANK STRIPE	1		
5-2	17515-B9A-000	FUEL TANK PROTECTOR	1		
5-3	87121-A5W-000-T2	SYM MARK (90 STRIPE) TYPE2	2		
5-4	87123-B9D-000	S LOGO STRIPE (40 MM)	2		
5	1751G-BAB-000-KB	FUEL TANK ASSY.BK-001C	1		
5-1	17511-BAA-000	FUEL TANK STRIPE	1		
5-2	17515-B9A-000	FUEL TANK PROTECTOR	1		
5-3	87121-A5W-000-T3	SYM MARK (90 STRIPE) TYPE3	2		
5-4	87123-B9D-000	S LOGO STRIPE (40 MM)	2		
5	1751G-BAB-000-QU	FUEL TANK ASSY.WH-300P	1		
5-1	17511-BAA-000	FUEL TANK STRIPE	1		
5-2	17515-B9A-000	FUEL TANK PROTECTOR	1		
5-3	87121-A5W-000-T3	SYM MARK (90 STRIPE) TYPE3	2		
5-4	87123-B9D-000	S LOGO STRIPE (40 MM)	2		
5	1751G-BAB-000-YR	FUEL TANK ASSY.Y-116C	1		
5-1	17511-BAA-000	FUEL TANK STRIPE	1		
5-2	17515-B9A-000	FUEL TANK PROTECTOR	1		
5-3	87121-A5W-000-T3	SYM MARK (90 STRIPE) TYPE3	2		
5-4	87123-B9D-000	S LOGO STRIPE (40 MM)	2		
5	1751G-BAB-000-CA	FUEL TANK ASSY.BU-2935U	1		
5-1	17511-BAA-000	FUEL TANK STRIPE	1		

5-2	17515-B9A-000	FUEL TANK PROTECTOR	1		
5-3	87121-A5W-000-T3	SYM MARK (90 STRIPE) TYPE3	2		
5-4	87123-B9D-000	S LOGO STRIPE (40 MM)	2		
5	17510-B9A-010-XJ	FUEL TANK COMP.R-187UL	1		
5-1	17511-BAA-000	FUEL TANK STRIPE	1		
5-2	17515-B9A-000	FUEL TANK PROTECTOR	1		
5-3	87121-A5W-000-T3	SYM MARK (90 STRIPE) TYPE3	2		
5-4	87123-B9D-000	S LOGO STRIPE (40 MM)	2		
6	17526-KC5-000	FUEL TANK CENTER RUBBER	1		
7	17613-N02-010	TANK CUSHION	1		
8	17614-N02-010	FUEL TANK COLLAR	1		
9	17620-B9A-000	FUEL FILLTER CAP COMP	1		
10	37800-B9D-010	FUEL UNIT	1		
11	37801-B8B-800	FUEL PUMP STAY PACKING	1		
12	50753-MKL-000	BODY HALF RUBBER	2		
13	83551-M36-000	BODY COVER GROMMET	4		
14	90106-B8B-900	FUEL PUMP BOLT	8		
15	9011A-N13-000	FLANGE SCREW M5X14 ASSY.	4		
16	90185-B9A-000	SOCKET BOLT 5X25	3		
17	95801-08040-08	BOLT FANGE 8X40	1		

※ Please check the color & stripe information according to the color index ! **TEAMWORLD IND. 2011.09**

※N/A = SUBSTITUTE ※Y = EXCHANGEABLE ※N =NOT EXCHANGEABLE

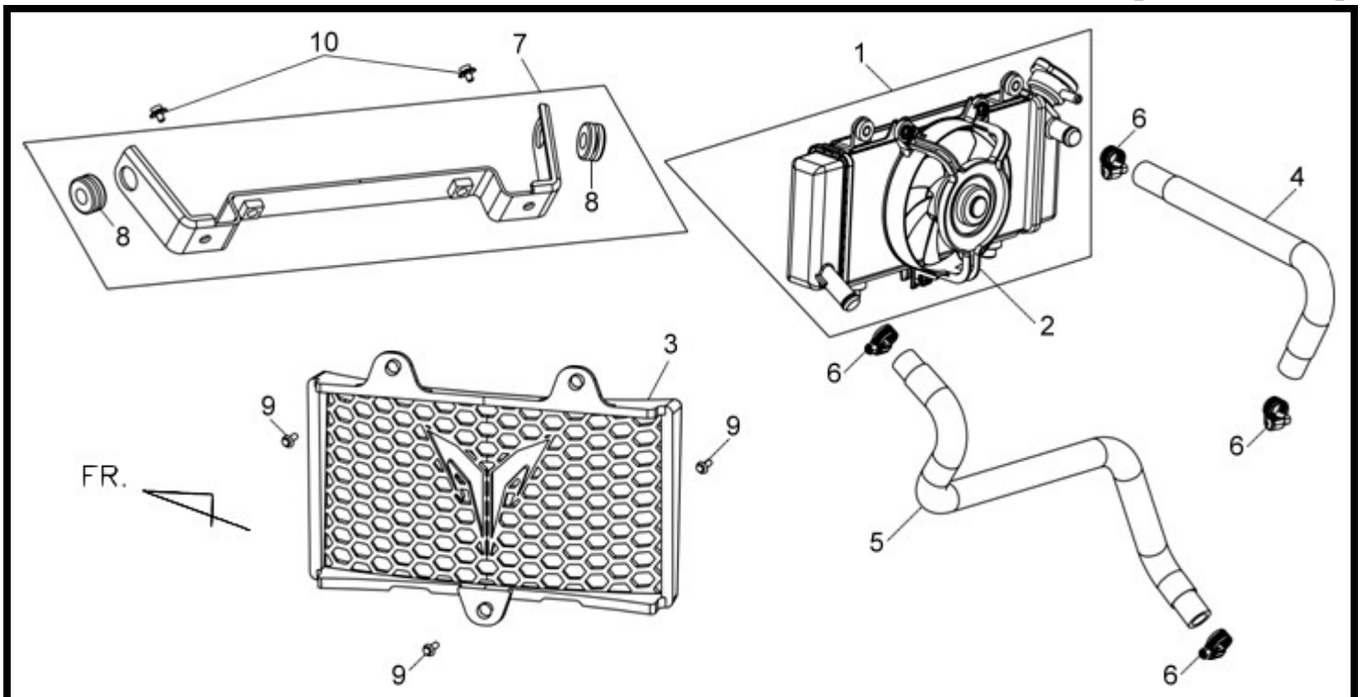

Pictures reference only

	PARTS NUMBER	DESCRIPTION	QTY	EFFECTIVE DATE	
1	19000-BAA-000	RADIATOR ASSY	1		
2	19020-BAA-000	SHROUD ASSY	1		
3	19210-BAA-000	RADIATOR AIR DUCT	1		
4	19501-BAA-000	RADIATOR INLET WATWE HOSE	1		
5	19503-BAA-000	ENG. INLET WATWE HOSE	1		
6	19505-REA-000	HOSE CLAMP	4		
7	5020A-BAA-000	FR COVER STAY	1		
8	64304-B9A-000	FR.COVER RUBBER	2		
9	90111-M9Q-800	FLANGE BOLT 6MM	3		
10	93401-06025-07	WASHER BOLT 10X20	2		

※ Please check the color & stripe information according to the color index ! **TEAMWORLD IND. 2011.09**

※N/A = SUBSTITUTE ※Y = EXCHANGEABLE ※N =NOT EXCHANGEABLE

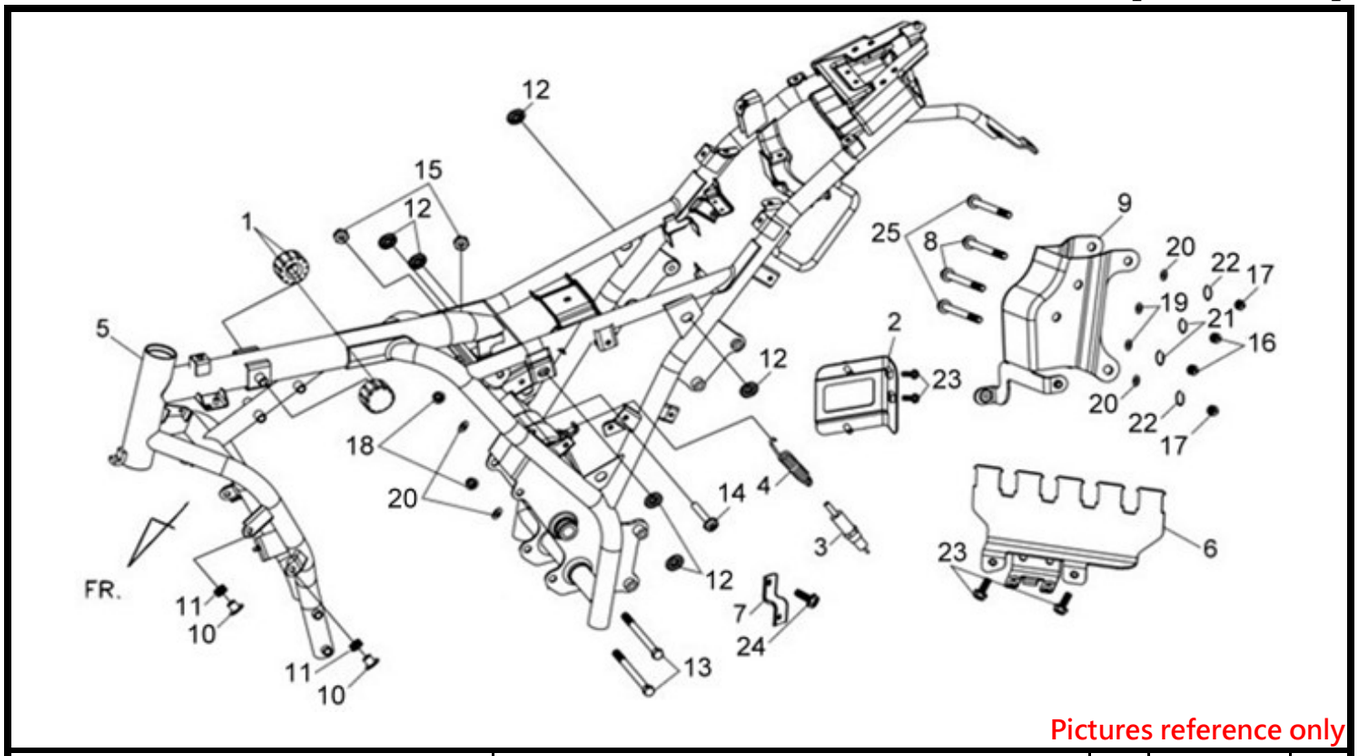

Pictures reference only

	PARTS NUMBER	DESCRIPTION	QTY	EFFECTIVE DATE	
1	17611-B13-000	FUEL TANK FR. CUSHION	2		
2	31605-BAA-000	REG.REC STAY A	1		
3	35350-324-880	RR. STOP SW. ASSY.	1		
4	35357-B9A-000	RR.BRAKE SW.SPRING	1		
5	5010N-BAB-000-IT	FRAME BODY COMP GY-7520U	1		
6	50246-BAA-000	RELAY STAY COMP	1		
7	50248-B9A-000	AIR/C STAY C	1		
8	50357-BAA-000	FLANGE BOLT 8*88	2		
9	5035A-BAA-000-IT	ENG HANGER LINK ASSY	1		
10	61201-B9A-000	FR. FENDER COLLAR	2		
11	64304-B9A-000	FR.COVER RUBBER	2		
12	83551-M36-000	BODY COVER GROMMET	6		
13	90019-B9A-000	FLANGE BOLT 10X114	2		
14	93401-05020-07	BOLT WASH(M5X20)	1		
15	94002-06020-0S	HEX NUT 6MM	2		
16	94021-08070	HEX CAP NUT 8MM	2		
17	94021-10020-0S	HEX CAP NUT 10MM	2		
18	94050-10070	FLANGE NUT 10mm	2		
19	94101-08700	PLAIN WASHER 8MM	2		
20	94101-10700	PLAIN WASHER 10MM	4		
21	94111-08800	SPRING WASHER 8MM	2		
22	94111-10700	WASHER SPRING 10MM	2		
23	95801-06012-07	FLANGE BOLT 6X12	4		
24	95801-06012-08	FLANGE BOLT 6X12	1		
25	95801-10110-07	FLANGE BOLT	2		

※ Please check the color & stripe information according to the color index !

※N/A = SUBSTITUTE ※Y = EXCHANGEABLE ※N =NOT EXCHANGEABLE

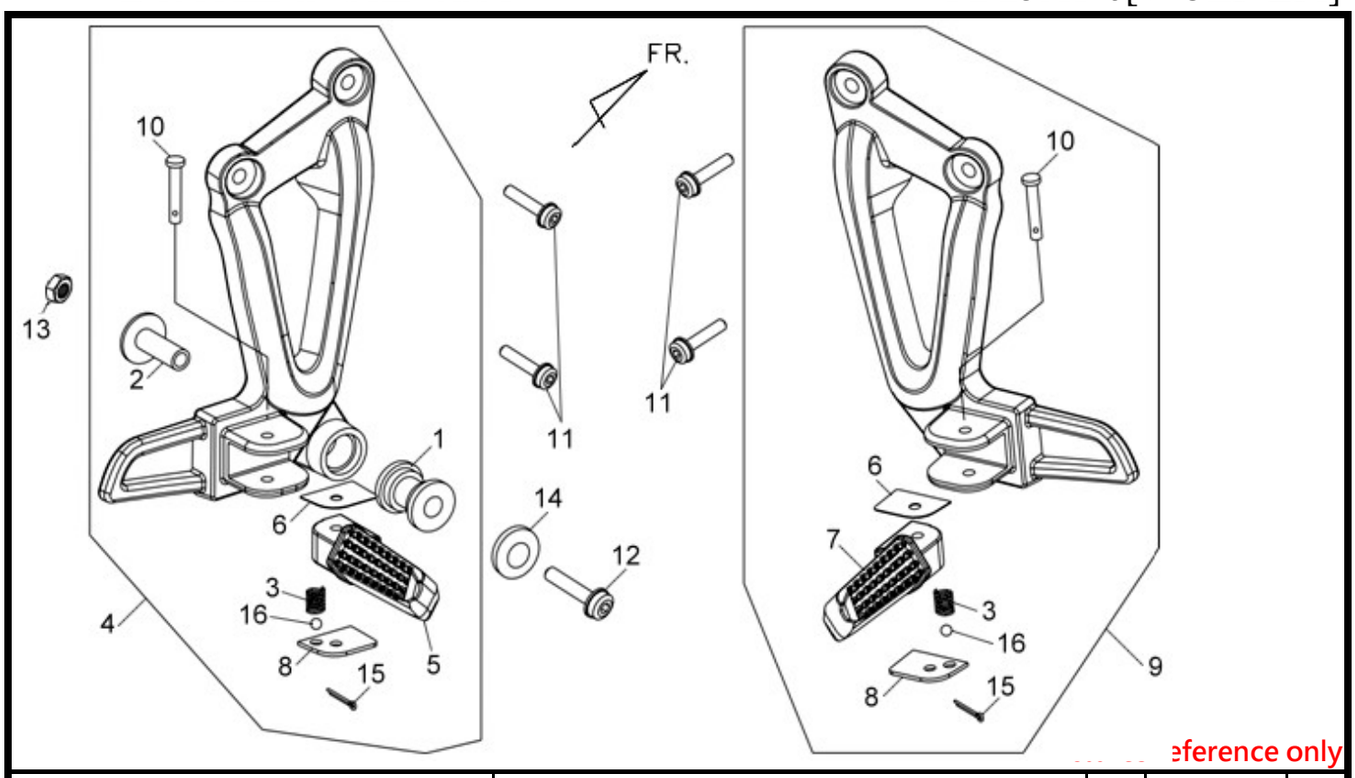

	PARTS NUMBER	DESCRIPTION	QTY	EFFECTIVE DATE	
1	18421-N01-000	MUFF. MOUNT RUBER	1		
2	18422-N01-000	MUFF. MOUNT COLLAR	1		
3	50703-R02-000	STOP SPG	2		
4	50710-B9A-000	R PILLION STEP ASSY.GY-429U	1		
5	50715-B9A-000	R PILLION STEP BAR	1		
6	50717-G02-000	STOP PLATE	2		
7	50718-B9A-000	L PILLION STEP BAR	1		
8	50719-B9A-000	THRUST PLATE	2		
9	50720-B9A-000	L PILLION STEP ASSY.GY-429U	1		
10	50722-B9A-000	STEP PIN	2		
11	90106-B9A-900	SPECIAL BOLT 8MM	4		
12	90112-B9A-000	SPECIAL BOLT M8*55	1		
13	90309-M9Q-000	NUT FLANGE 8MM-12	1		
14	94103-08000	PLAIN WASHER 8MM	1		
15	94201-20150	SPLIT PIN 2.0X15	2		
16	96211-08000	STEEL BALL #8 (6.350MM 1/4")	2		

※ Please check the color & stripe information according to the color index !

TEAMWORLD IND. 2011

※N/A = SUBSTITUTE ※Y = EXCHANGEABLE ※N =NOT EXCHANGEABLE

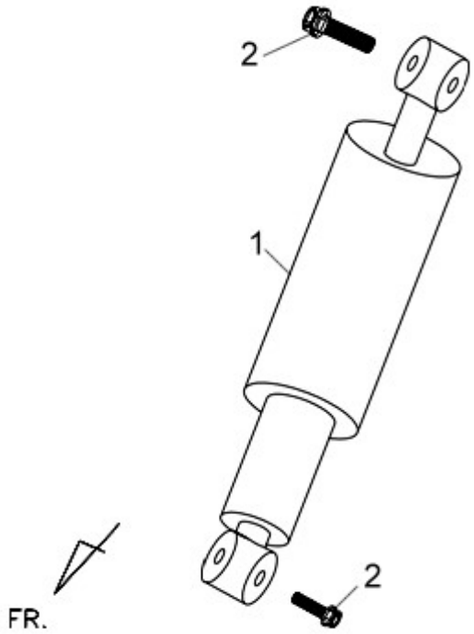

Pictures reference only

	PARTS NUMBER	DESCRIPTION	QTY	EFFECTIVE DATE	
1	52400-BAA-000-QQ	RR.CUSHION ASSY	1		
2	95801-10050-07	BOLT FLANGE 10X50	2		

※ Please check the color & stripe information according to the color index ! **TEAMWORLD IND. 2011.09**

※N/A = SUBSTITUTE ※Y = EXCHANGEABLE ※N =NOT EXCHANGEABLE

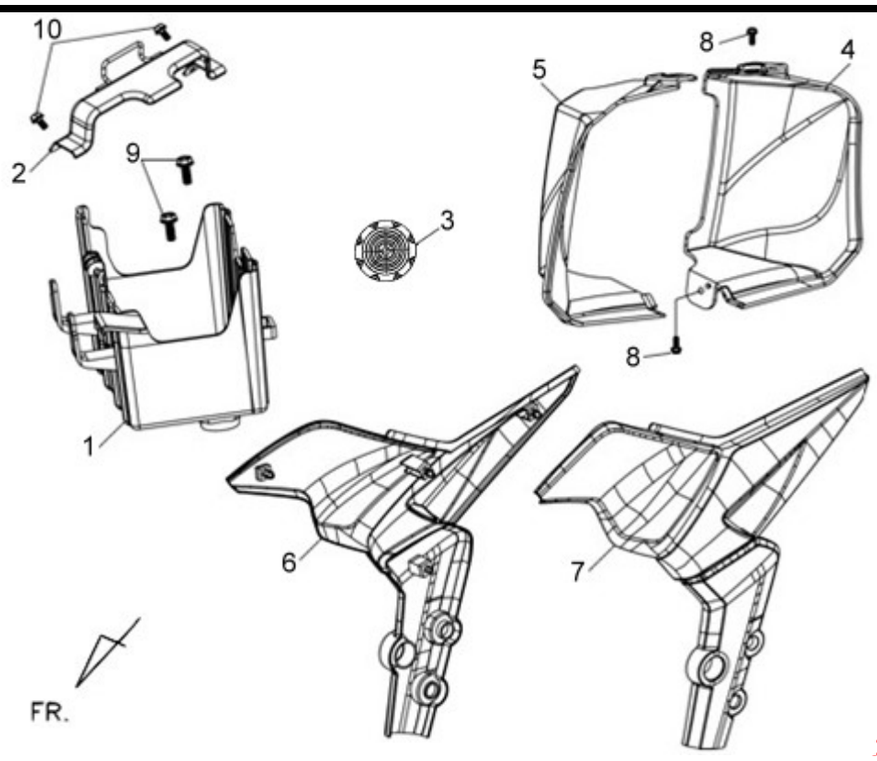

:tures reference only

	PARTS NUMBER	DESCRIPTION	QTY	EFFECTIVE DATE	
1	50321-B9A-000	BATTERY CASE	1		
2	5033A-B9D-000	BATTERY CASE STAY ASSY	1		
3	53210-BAA-000-OE	STEM NUT COVER S-877U	1		
4	64302-B9A-000	R FR TOP COVER BK-001U	1		
5	64402-B9A-000	L FR TOP COVER BK-001U	1		
6	8350A-B7A-000-IL	R FR BODY COVER ASSY.GY-7450U	1		
6-1	87127-B7A-900	FR. BODY COVER STRIPE(WOLF)	1		
7	8360A-B7A-000-IL	L FR BODY COVER ASSY.GY-7450U	1		
7-1	87127-B7A-900	FR. BODY COVER STRIPE(WOLF)	1		
8	90110-N02-000	SPECIAL SCREW 6X14	1		
9	90111-M9Q-900	FLANGE BOLT(MFZn2-C)6MM	2		
10	95801-06016-08	FLANGE BOLT 6X16	2		

※ Please check the color & stripe information according to the color index ! **TEAMWORLD IND. 2011.09**

※N/A = SUBSTITUTE ※Y = EXCHANGEABLE ※N =NOT EXCHANGEABLE

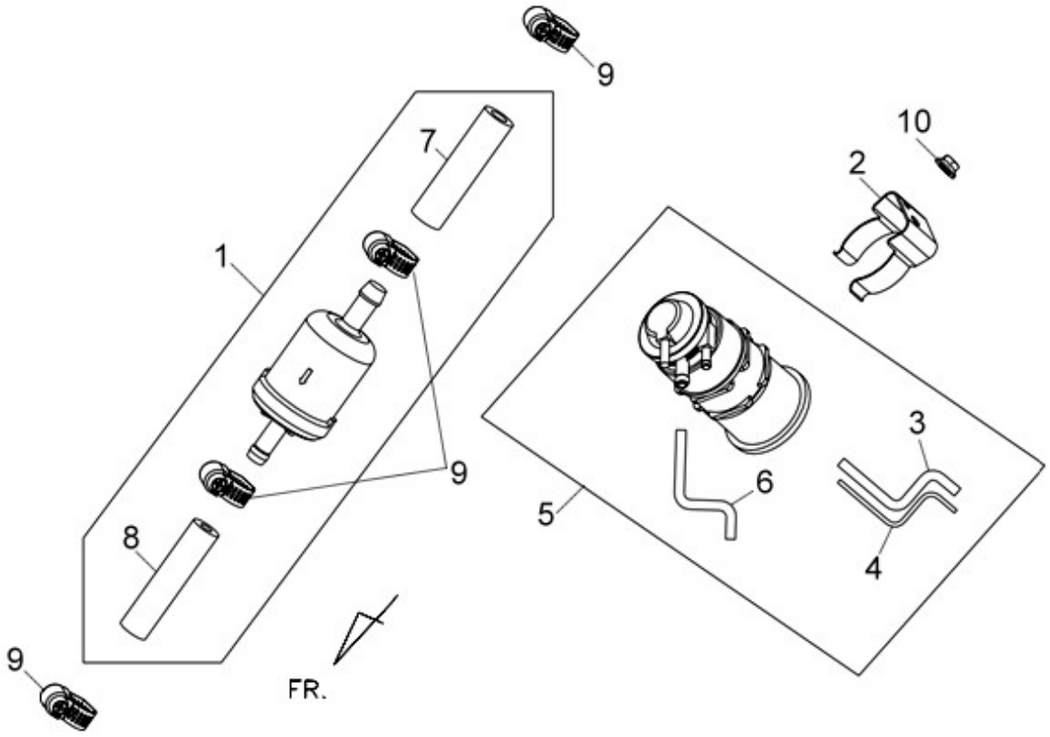

eference only

	PARTS NUMBER	DESCRIPTION	QTY	EFFECTIVE DATE	
1	1690A-BAA-000	FUEL STRN ASSY	1		
2	17551-B8B-000	CANISTER CLAMP	1		
3	17559-BAA-000	CANISTER/AIR TUBE B	1		
4	17563-BAA-000	CANISTER/AIR TUBE A	1		
5	1756A-BAA-000	CANISTER ASSY	1		
6	17688-B9A-000	CANISTER-AIR/C.TUBE ASSY	1		
7	17784-BAA-000	FUEL STRN.HOSE	1		
8	17785-BAA-000	FUEL INJECT HOSE	1		
9	19505-H5D-900	HOSE CLAMP	2		
10	94050-06000	FLANGE NUT 6MM	5		

※ Please check the color & stripe information according to the color index ! **TEAMWORLD IND. 2011.09**

※N/A = SUBSTITUTE ※Y = EXCHANGEABLE ※N =NOT EXCHANGEABLE

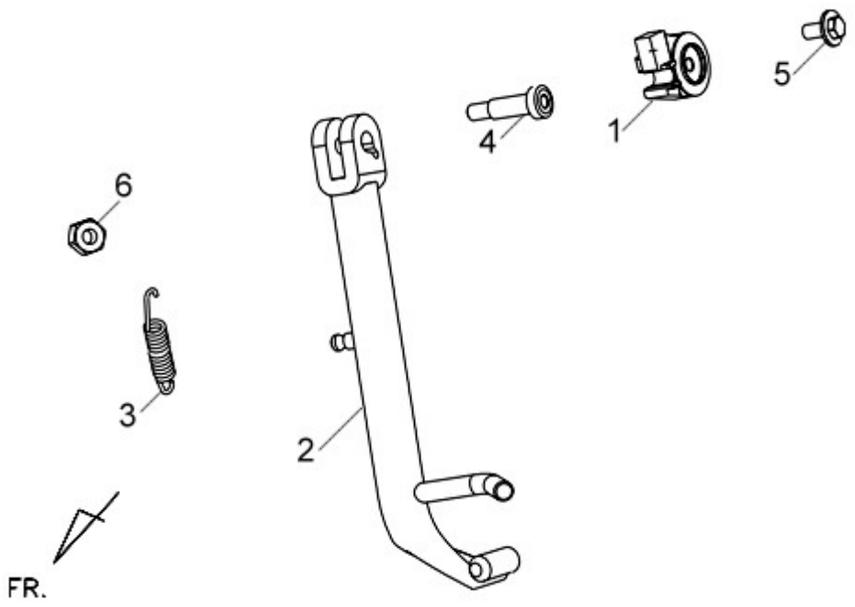

Pictures reference only

	PARTS NUMBER	DESCRIPTION	QTY	EFFECTIVE DATE	
1	36500-HMA-900	SIDE STAND SW COMP	1		
2	50530-BAA-000-IT	SIDE STAND BAR COMP.GY-7520U	1		
3	5053A-B7A-000	SIDE STAND SPG.ASSY	1		
4	90108-B7A-000	SIDE STAND PIVOT SCREW	1		
5	93404-06016-07	BOLT WASHER 6X16	1		
6	94002-10080-0S	HEX NUT 10MM	1		

※ Please check the color & stripe information according to the color index ! **TEAMWORLD IND. 2011.0**

※N/A = SUBSTITUTE ※Y = EXCHANGEABLE ※N =NOT EXCHANGEABLE

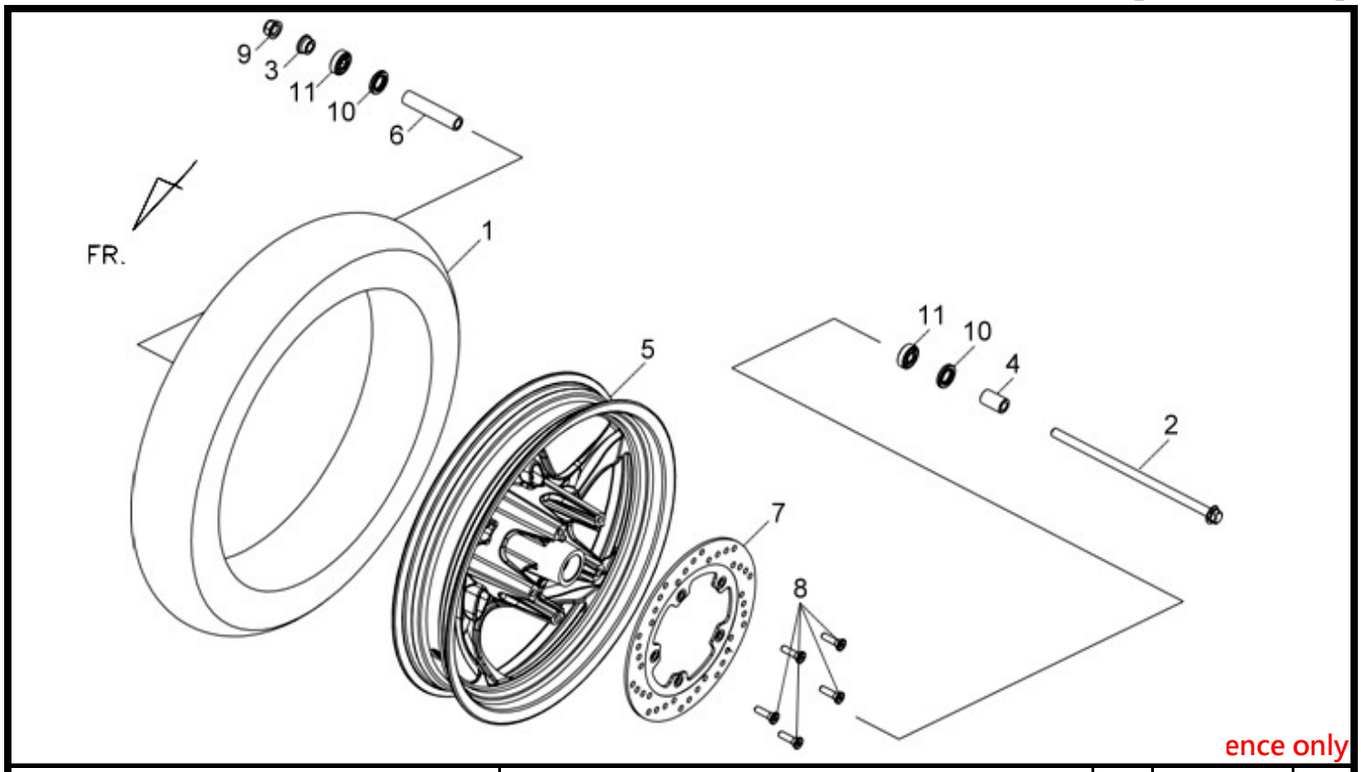

	PARTS NUMBER	DESCRIPTION	QTY	EFFECTIVE DATE	
1	1T011107017-4PR-6102	FR TIRE ASSY.(110/70-17)	1		
2	44301-B9A-000	FR. WHEEL AXLE	1		
3	44311-B9A-000	FR WHEEL SIDE COLLAR	1		
4	44321-B9A-000	FR WHEEL SIDE COLLAR A	1		
5	44601-B9A-100-IT	FR CASTING WHEEL COMP GY-7520U	1		
6	44620-B9A-000	FR. WHEEL DISTANCE COLLAR	1		
7	45121-BAA-000-DM	FR.BRAKE DISK GD-7403S	1		
8	90106-N02-000	FR. DISK BOLT 8*26	5		
9	90306-M9Q-000	SELF LOCK NUT 12MM	1		
10	91252-030-003	OIL SEAL 23X37X7	2		
11	96140-63010-10	RAD.BALL.BRG.6301TU/2A	2		

※ Please check the color & stripe information according to the color index ! **TEAMWORLD IND. 2011.09**

※N/A = SUBSTITUTE ※Y = EXCHANGEABLE ※N =NOT EXCHANGEABLE

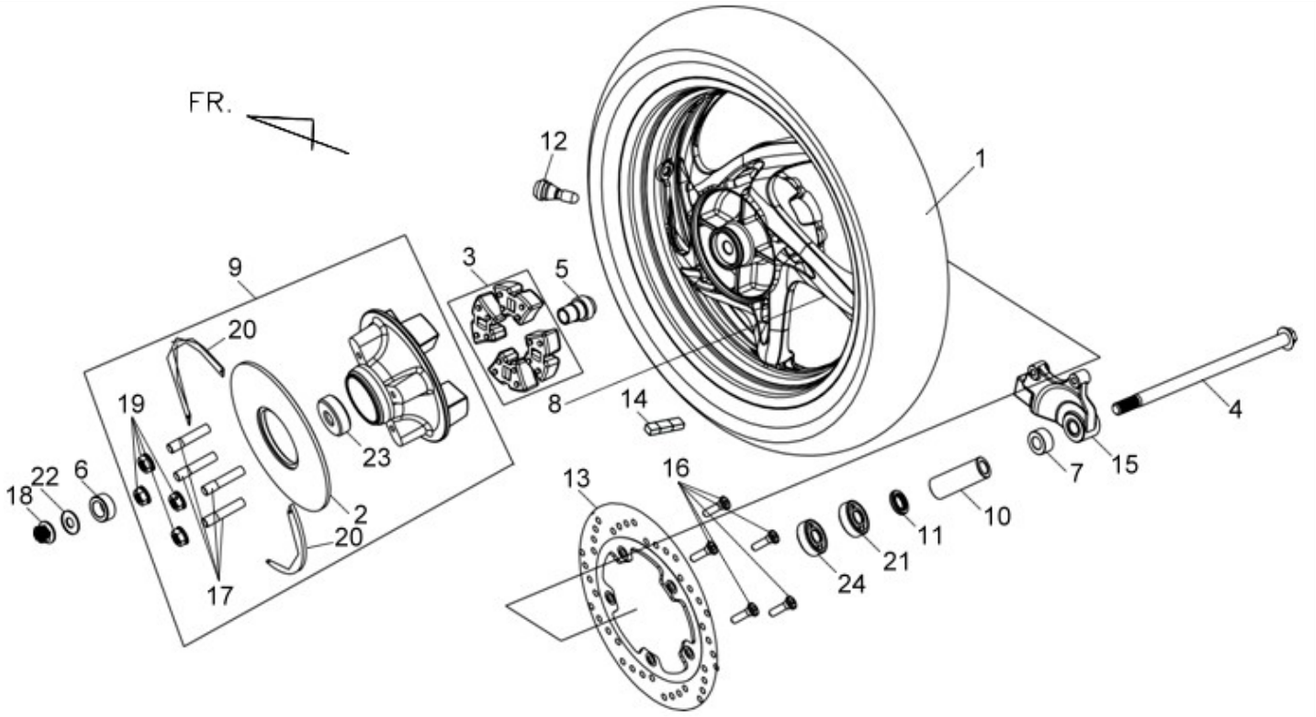

Pictures reference only

	PARTS NUMBER	DESCRIPTION	QTY	EFFECTIVE DATE	
1	1T011407017-6103	RR TIRE ASSY.(140/70-17)M6103	1		
2	41201-BAA-000	FINAL DRIVEN SPROCKET	1		
3	41241-B8G-000-A	RR.WHEEL DAMPER(4PCS/SET)	1		
4	42301-B7A-000	RR WHEEL AXLE	1		
5	42303-B7A-000	RR AXLE SLEEVE	1		
6	42304-B7A-000	RR WHEEL SIDE COLLAR A	1		
7	42313-B7A-000	RR WHEEL SIDE COLLAR	1		
8	42601-B7A-100-IT	RR.CASTING WHEEL COMP GY-7520U	1		
9	4261A-BAA-000-IT	FINAL DRIVEN ASSY.GY-7520U	1		
10	42620-B7A-000	DISTANCE COLLAR	1		
11	42653-B8G-000	O-RING 52.7X2.5	1		
12	42753-ABA-000	VALVE RIM	1		
13	43121-BAA-000-DM	RR.BRAKE DISK GD-7403S	1		
14	44720-H9A-000	BALANCE WEIGHT	1		
15	52105-B7A-000	RR BRAKE BRKT	1		
16	90106-N02-000	FR. DISK BOLT 8*26	5		
17	90110-B8G-000	STUD BOLT 10X39.5	4		
18	90304-B7A-000	RR.AXLE U NUT 16MM	1		
19	90305-BAA-000	U NUT 10MM	4		
20	90522-B8G-000	TONGUED WASHER 1.2MM	2		
21	91252-B8G-000	OIL SEAL 30X47X7	1		
22	94101-16000	PLAIN WASHER 16MM	2		
23	96120-60050-10	BALL BRG. 6005Z	1		
24	96120-63030-10	BALL BEARING 6303(Z)	2		

※N/A = SUBSTITUTE ※Y = EXCHANGEABLE ※N =NOT EXCHANGEABLE

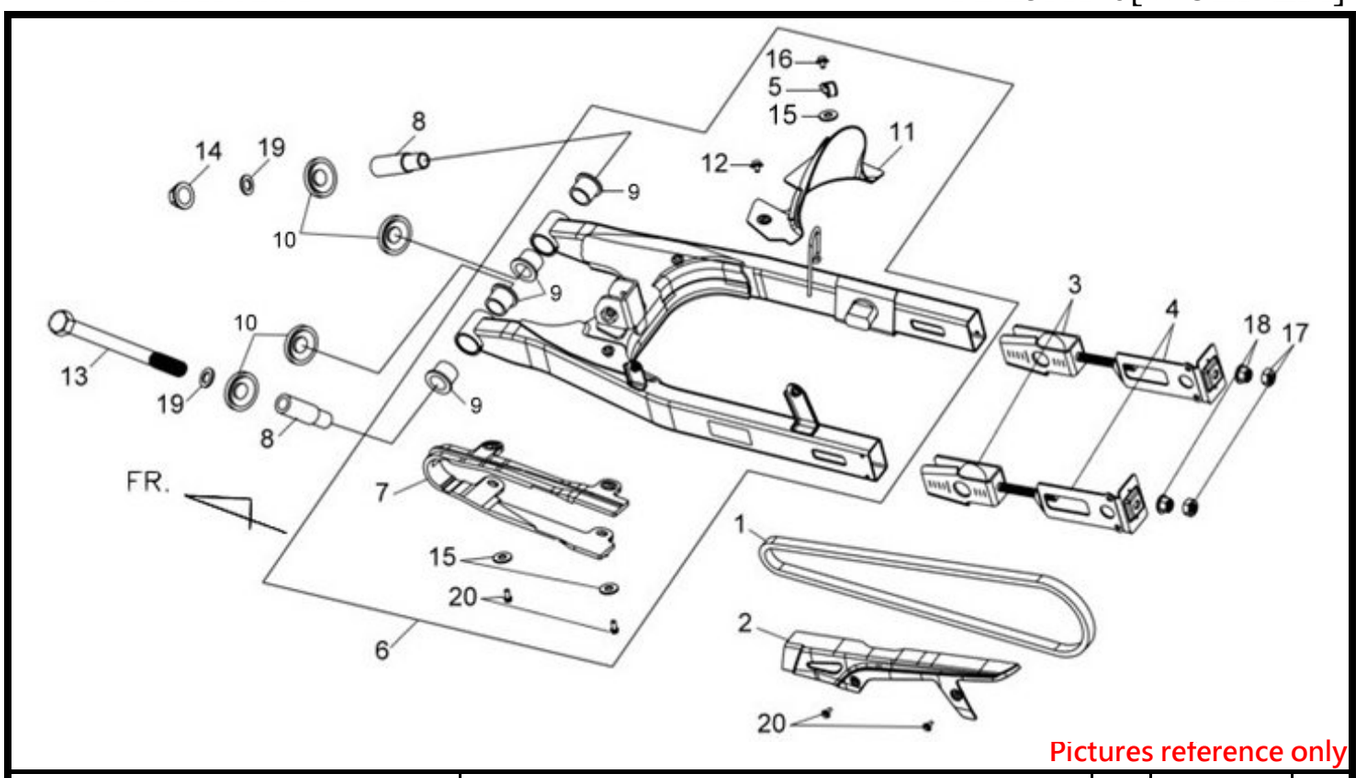

Pictures reference only

	PARTS NUMBER	DESCRIPTION	QTY	EFFECTIVE DATE	
1	1C40530-BAA-000	DRIVE CHAIN520VX102FB	1		
2	40510-B9A-000	DRIVE CHAIN COVER BK-001U	1		
3	40543-B7A-000	CHAIN ADJUSTER	2		
4	40546-BAA-000	RR FORK END CAP	2		
5	43127-B7A-000	RR BRAKE HOSE CLAMP	1		
6	5210A-BAA-000-IL	RR.FORK ASSY. GY-7450U	1		
7	52170-B9A-010	CHAIN SLIDER	1		
8	52505-N02-000	RR. CUSH. SLEEVE	2		
9	52506-N02-000	RR. FORK OILES	4		
10	52507-N02-000	RR. FORK DUST SEAL	4		
11	80103-B9A-000	RR FENDER C BK-001U	1		
12	90111-VS5-000	FLANGE BOLT 6MM	1		
13	90121-B9A-000	RR. FORK PIVOT BOLT	1		
14	90305-GE8-003	U NUT 14MM	1		
15	90556-N01-000	CHAIN SLIDER WASHER	4		
16	93404-06012-07	WASHER BOLT 6X12	1		
17	94001-08000	HEX NUT	2		
18	94050-08000	FLANGE NUT 8MM	2		
19	94101-14000	PLAIN WASHER 14MM	2		
20	95801-06016-07	FLANGE BOLT 6X16	4		

※ Please check the color & stripe information according to the color index ! **TEAMWORLD IND. 2011.09**

※N/A = SUBSTITUTE ※Y = EXCHANGEABLE ※N =NOT EXCHANGEABLE

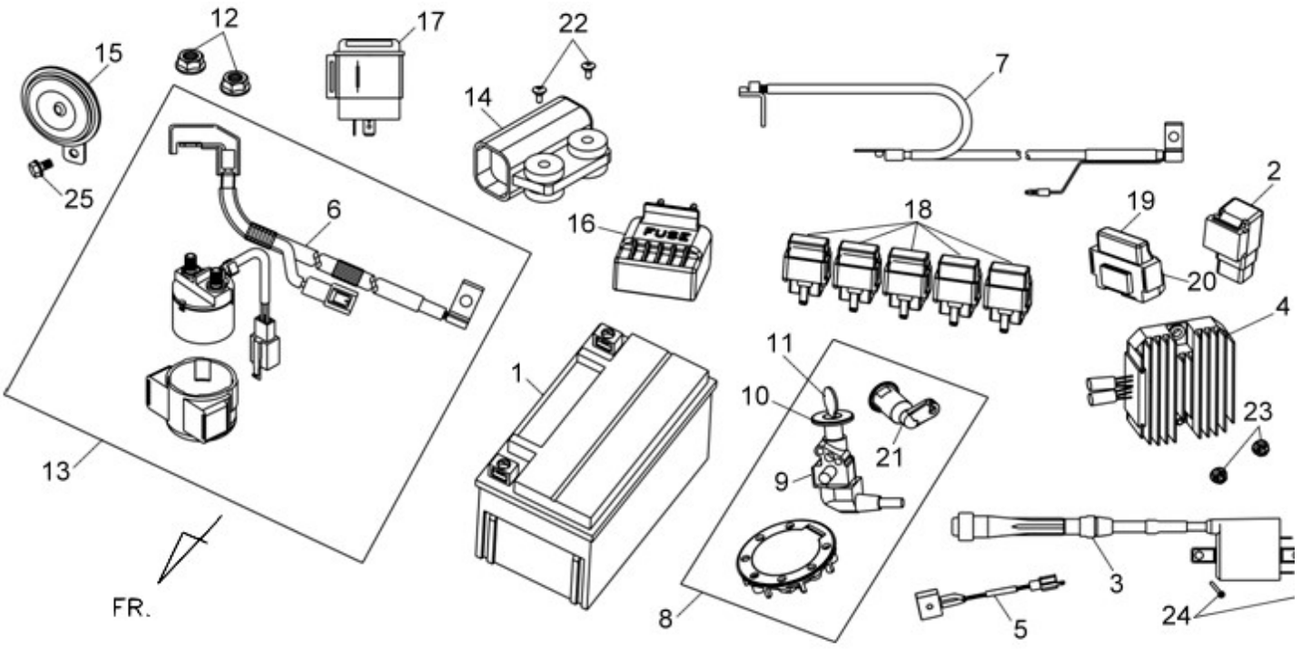

Pictures reference

	PARTS NUMBER	DESCRIPTION	QTY	EFFECTIVE DATE
1	1Y01BAA01-Y	BATTERY ASSY.YT12A-BS	1	
2	3043A-BAA-000	BATTERY OPEN CONTROL ASSY	1	
3	3051A-BAC-000	IGN. COIL ASSY	1	
4	31600-BAA-000	REG.REC.ASSY.	1	
5	31700-M46-000	SILICON RECT. COMP	1	
6	32411-BAA-000	BATTERY CABLE	1	
7	32412-B9A-000	EARTH CABLE	1	
8	35010-BAB-000	KEY SET	1	
9	35100-BAB-000	COMB.SW&LOCK ASSY	1	
10	35101-B9A-000	CAP CYLINER	1	
11	35111-B9A-000-A	KEY COMP	1	
12	35859-M9Q-000	STAR MAG. SW NUT	2	
13	3585A-BAA-000	START MAG. SW. SET	1	
14	36100-MMA-100	ROLL OVER SENSOR ASSY	1	
15	38110-BAA-000	HORN COMP	1	
16	38201-B9D-000	FUSE BOX PROTECTOR	1	
17	38300-T53-010	WINKER RELAY ASSY	1	
18	3850A-HLA-010	ELEC. RELAY ASSY.	5	
19	38710-BAA-000	E.C.U	1	
20	64321-A5L-000	ECU SUSPENSION	1	
21	77239-T53-000	KEY SEAT LOCK	1	
22	93891-04025-08	WASHER SCREW 4X25	2	
23	94050-06070	FLANGE NUT 6MM	2	
24	95801-06025-07	FLANGE BOLT 6X25	2	
25	95801-08012-07	FLANGE BOLT 8X12	1	

※N/A = SUBSTITUTE ※Y = EXCHANGEABLE ※N =NOT EXCHANGEABLE

Fi]

only

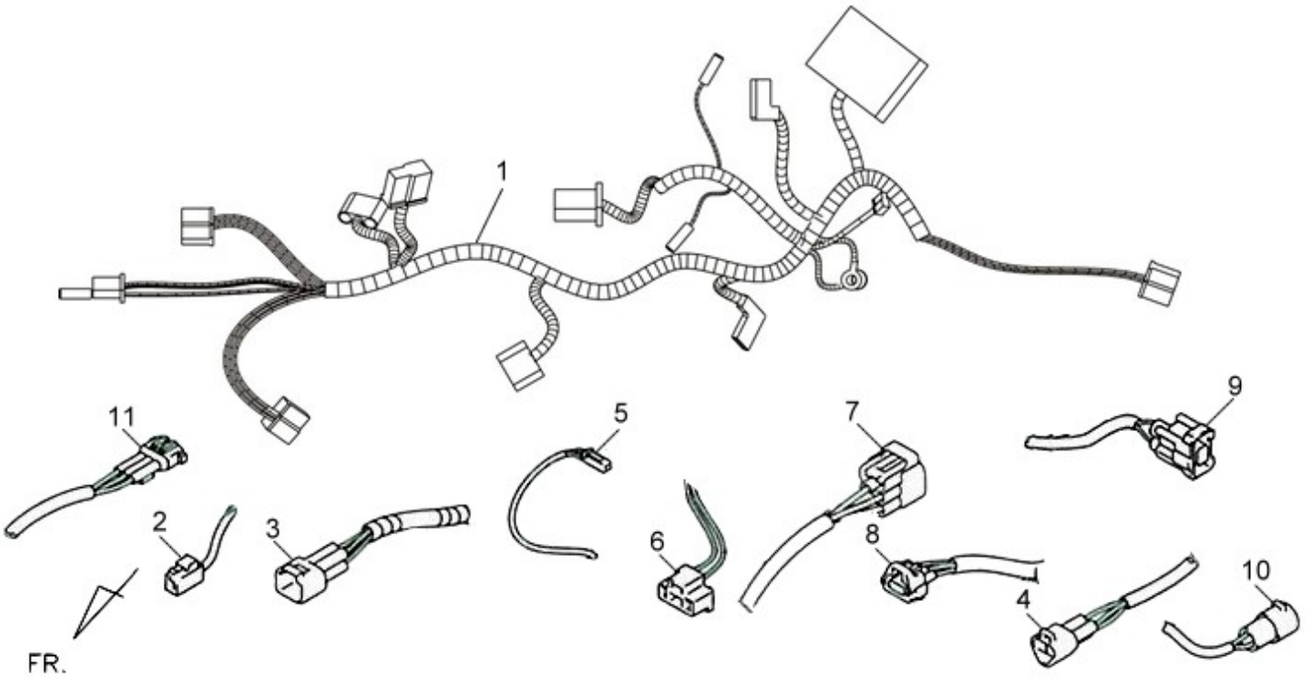

Pictures reference only

	PARTS NUMBER	DESCRIPTION	QTY	EFFECTIVE DATE	
1	32100-BAA-020	WIRE HARNESS	1		
2	32601-M9Q-000	IG.COIL SUB.CORD	1		
3	32609-M9Q-000	O2 SENSOR SUB.CORD	1		
4	32610-M9Q-000	FUEL PUMP SUB.CORD	1		
5	32611-M9Q-000	ET SENSOR SUB.CORD	1		
6	32612-M9Q-000	T-MAT SUB.CORD	1		
7	32620-M9Q-000	INJECTOR SUB.CORD	1		
8	32621-M9Q-000	TPS SUB.CORD	1		
9	32622-M9Q-000	AISV SUB.CORD	1		
10	32623-M9Q-000	ABV SUB.CORD	1		
11	32625-M9Q-000	DIAGNOSTIC SUB.CORD	1		

※ Please check the color & stripe information according to the color index !

TEAMWORLD IND. 2011.

※N/A = SUBSTITUTE ※Y = EXCHANGEABLE ※N =NOT EXCHANGEABLE

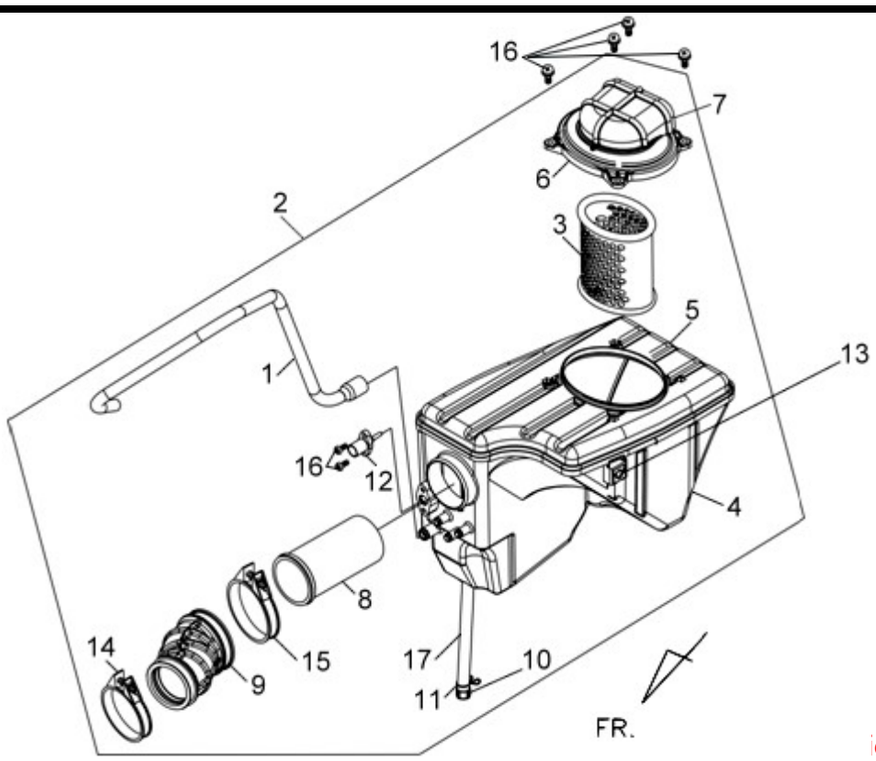

ctures reference only

	PARTS NUMBER	DESCRIPTION	QTY	EFFECTIVE DATE	
1	15761-BAA-000	BREATHER TUBE	1		
2	17200-BAB-000	AIR CLEANER ASSY.	1		
3	17211-B9A-000	AIR/C ELEMENT COMP	1		
4	17230-BAA-000	AIR/C CASE	1		
5	17231-BAB-000	AIR/C COVER COMP	1		
6	17232-B9A-000	AIR/C COVER CAP	1		
7	17234-BAA-000	INLET DUCT	1		
8	17235-BAA-000	AIR/C DUCT	1		
9	17253-BAA-000	AIR/C CONN.TUBE	1		
10	17370-M9Q-000	PLUG,BREATHER TUBE.	1		
11	17371-M9Q-000	BREATHER TUBE CLIP	2		
12	37830-HMC-000	AIR TEMP SENSOR	1		
13	90305-VS1-000	CLIP NUT 6MM	3		
14	90652-HMA-000	AIR/C CONN.TUBE BAND 48	1		
15	90652-REA-000	A/C CONNECTING TUBE BAND 62	1		
16	93891-05016-07	WASH SCREW 5X16	6		
17	95003-23022-60	V TUBE(8X12X220)	1		

※ Please check the color & stripe information according to the color index !

TEAMWORLD IND. 2011.0

※N/A = SUBSTITUTE ※Y = EXCHANGEABLE ※N =NOT EXCHANGEABLE

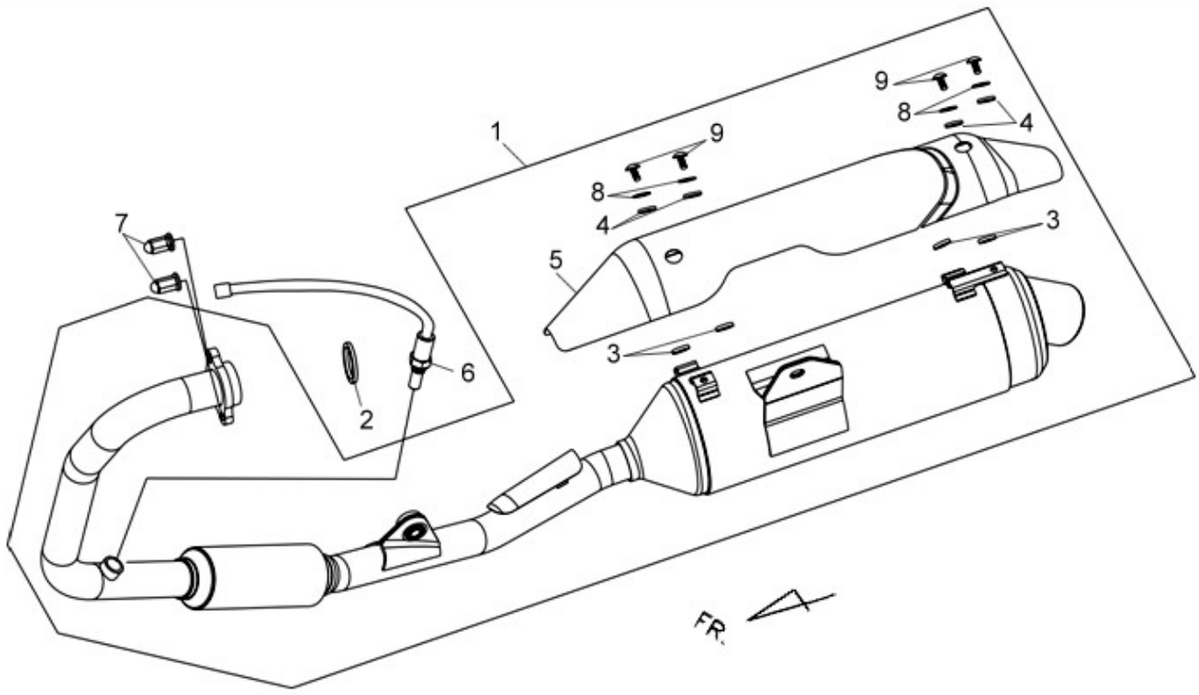

Pictures reference only

	PARTS NUMBER	DESCRIPTION	QTY	EFFECTIVE DATE	
1	18000-BAA-000	EXH. MUFFLER ASSY	1		
2	18291-B3U-000	EXH. PIPE GASKET	1		
3	18292-F3E-000	PROTECTOR PACKING A	4		
4	18293-K3A-000	PROTECTOR PACKING B	4		
5	18318-BAA-000	MUFFLER PROTECTOR	1		
6	37890-A5L-000	O2 SENSOR	1		
7	90043-HMA-000	CAP NUT	2		
8	90107-V02-000	PLAIN WASHER	4		
9	90111-MMA-000	SPECIAL SCREW 6*16	4		

※ Please check the color & stripe information according to the color index. **TEAMWORLD IND. 2011.09**

※N/A = SUBSTITUTE ※Y = EXCHANGEABLE ※N =NOT EXCHANGEABLE

MODEL: PD25A1-6

PARTS NO. INDEX

2011.09

PARTS NO.	NO.		PARTS NO.	NO.		PARTS NO.	NO.
06000			14100-RB1-000	E06		1621A-HMC-000	E19
06414-LEF-000	E19		14105-RFA-000	E06		16401-BAA-000	E19
06415-HNS-000	E19		14105-X01-000	E06		1670A-BAA-020	F19
06416-HNS-000	E19		14108-M36-000	E06		1690A-BAA-000	F25
11000			14311-BAA-300	E12		**17000**	
11100-BAA-000-BK	E17		1443A-RB1-000	E05		1711A-BAA-000	E19
11109-BAA-000	E18		1444A-RB1-000	E05		17120-BAA-000	E19
11191-BAA-000	E17		14451-HMA-000	E05		17200-BAB-000	F32
11200-BAA-000-BK	E18		14457-HMA-000	E06		17211-B9A-000	F32
11330-BAA-000	E09		14520-BAA-000	E03		17230-BAA-000	F32
1133B-BAA-000	E06		14522-BAA-000	E03		17231-BAB-000	F32
11341-BAA-000	E07		14523-M9Q-000	E03		17232-B9A-000	F32
11393-BAA-000	E09		14524-H6T-000	E03		17234-BAA-000	F32
11395-BAA-000	E07		14525-H6T-000	E03		17235-BAA-000	F32
12000			14711-HMA-000	E05		17247-B04-000	F19
12100-BAA-000	E03		14721-RFS-000	E05		17253-BAA-000	F32
12100-BAA-000-A	E03		14751-HMA-000	E05		17370-M9Q-000	F32
12191-HMA-000	E03		14761-HMA-000	E05		17371-M9Q-000	F32
12200-BAA-000	E02		14771-GB4-680	E05		17506-B9A-000	F19
12209-H6B-900	E05		14777-KN7-670	E05		17508-B9A-000	F19
12251-HMA-000	E03		14781-M9Q-000-A	E05		17510-B9A-010-XJ	F19
1230A-BAA-000	E01		**15000**			17511-BAA-000	F19
1231A-BAA-000	E04		15100-HMA-000	E10		17511-BAA-000	F19
12342-X01-000	E09		15126-B8A-000	E10		17511-BAA-000	F19
12342-X01-000	E17		15132-HMA-000	E10		17511-BAA-000	F19
12342-X01-000	E18		15133-HMA-000	E10		17511-BAA-000	F19
1236A-B9A-000-IT	E18		15400-N01-000	E06		17511-BAA-000	F19
12391-HMA-000	E01		15414-N01-000	E06		17515-B9A-000	F19
13000			15415-N01-010	E06		17515-B9A-000	F19
13000-BAA-000	E12		15421-B9D-000	E18		17515-B9A-000	F19
13010-HMA-000	E03		15426-107-000	E18		17515-B9A-000	F19
13101-BAA-000	E03		15451-B08-000	E11		17515-B9A-000	F19
13111-HMA-000	E12		15451-B08-000	E17		17515-B9A-000	F19
13201-BAA-000	E12		15500-BAA-000	E01		1751G-BAB-000-CA	F19
13301-BAA-000	E16		15652-B9A-000	E09		1751G-BAB-000-GE	F19
13322-BAA-300	E12		1565A-BAA-000	E09		1751G-BAB-000-KB	F19
13331-BAA-000	E08		15711-HML-000	E10		1751G-BAB-000-QU	F19
1333A-BAA-000	E16		15761-BAA-000	F32		1751G-BAB-000-YR	F19
13381-BAA-300	E12		**16000**			17526-KC5-000	F19
14000			16201-HMC-000	E19		17551-B8B-000	F25

MODEL: PD25A1-6

PARTS NO. INDEX

2011.09

PARTS NO.	NO.		PARTS NO.	NO.		PARTS NO.	NO.	
17559-BAA-000	F25		19505-H5D-900	F25		23461-BAA-000	E14	
17563-BAA-000	F25		19505-REA-000	F20		23471-BAA-000	E15	
1756A-BAA-000	F25		19507-BAA-000	F11		23491-BAA-000	E15	
17611-B13-000	F21		19509-BAA-000	F11		23501-BAA-000	E14	
17613-N02-010	F19		**22000**			23502-BAA-000	E14	
17614-N02-010	F19		22100-BAA-000	E11		23502-BAA-000	E15	
17620-B9A-000	F19		22101-BAA-300	E11		23511-BAA-000	E15	
17685-BAA-000	E19		2210A-BAA-000	E11		23521-BAA-000	E14	
17688-B9A-000	F25		22116-BAA-000	E11		23531-BAA-000	E15	
17784-BAA-000	F25		22118-BAA-000	E11		23801-BAA-000	E15	
17785-BAA-000	F25		22119-BAA-000	E11		23811-KR3-600	E15	
17910-BAA-000	F08		22121-BAA-000	E11		**24000**		
17920-BAA-000	F08		22201-BAA-000-A	E11		24211-BAA-000	E13	
18000			22202-BAA-000	E11		24221-BAA-000	E13	
18000-BAA-000	F33		22311-BAA-000-A	E11		24231-BAA-000	E13	
18291-B3U-000	F33		22350-BAA-000	E11		24241-M2Q-000	E13	
18292-F3E-000	F33		22361-BAA-000	E11		24301-BAA-000	E13	
18293-K3A-000	F33		22366-N01-000	E11		24319-R02-000	E13	
18318-BAA-000	F33		22401-BAA-000	E11		24323-R02-000	E13	
18421-N01-000	F22		22710-BAA-000	E09		24411-BAA-000	E13	
18422-N01-000	F22		22815-R02-000	E09		24416-X01-000	E13	
18647-BAA-000	E02		22838-BAA-000	E09		24430-BAA-000	E17	
18654-N14-000	E01		22870-BAA-000	F08		24435-B3U-000	E17	
18654-N14-000	E02		**23000**			24610-BAA-000	E13	
19000			23111-BAA-300	E11		2461A-BAA-000	E13	
19000-BAA-000	F20		23112-BAA-000	E11		24621-BAA-000	E13	
19020-BAA-000	F20		23114-BAA-300	E11		24631-107-000	E13	
19104-MBO-700	F11		23115-BAA-300	E11		24652-BAA-000	E13	
1910A-BAA-000	F11		23116-BAA-300	E11		24702-B9A-000	F12	
19210-BAA-000	F20		23117-BAA-300	E11		2470A-B9A-000	F12	
19215-HLA-000	E21		23118-BAA-000	E11		2470B-B9A-000	F12	
19217-H9A-300	E21		23119-BAA-000	E11		24781-205-000	F12	
19229-H9A-000	E21		23121-BAA-000	E17		**28000**		
1922A-BAA-000	E21		23210-BAA-000	E14		28100-BAA-000	E20	
19231-BAA-000	E21		23213-BAA-000	E14		28102-BAA-000	E20	
19300-HMA-000	E02		23221-BAA-000	E15		28102-RB1-000	E20	
19315-BAA-000	E02		23426-BAA-000	E15		28104-BAA-000	E20	
19501-BAA-000	F20		23427-BAA-000	E15		28110-BAA-000	E08	
19503-BAA-000	F20		23441-BAA-000	E14		2812A-BAA-000	E08	
19505-H5D-900	F11		23451-BAA-000	E15		**30000**		

MODEL: PD25A1-6

PARTS NO. INDEX

2011.09

PARTS NO.	NO.		PARTS NO.	NO.		PARTS NO.	NO.	
3043A-BAA-000	F30		34905-A8D-000	F03		41201-BAA-000	F28	
3051A-BAC-000	F30		34905-A8D-000	F15		41241-B8G-000-A	F28	
31000			34908-M9Q-100	F03		**42000**		
31110-BAA-000	E08		**35000**			42301-B7A-000	F28	
31120-BAA-000	E08		35010-BAB-000	F30		42303-B7A-000	F28	
31200-BAA-000	E20		35100-BAB-000	F30		42304-B7A-000	F28	
31600-BAA-000	F30		35101-B9A-000	F30		42313-B7A-000	F28	
31605-BAA-000	F21		35111-B9A-000-A	F30		42601-B7A-100-IT	F28	
31700-M46-000	F30		35150-BAA-000	F08		4261A-BAA-000-IT	F28	
32000			35200-B9A-000	F08		42620-B7A-000	F28	
32100-BAA-020	F31		35330-BAA-000	F08		42653-B8G-000	F28	
32161-T15-000	F15		35350-324-880	F21		42753-ABA-000	F28	
32411-BAA-000	F30		35357-B9A-000	F21		**43000**		
32412-B9A-000	F30		35759-BAA-000	E18		43100-BAA-000-DM	F05	
32601-M9Q-000	F31		35859-M9Q-000	F30		43108-BAA-000-A	F05	
32609-M9Q-000	F31		3585A-BAA-000	F30		43121-BAA-000-DM	F28	
32610-M9Q-000	F31		**36000**			43126-B7A-000	F05	
32611-M9Q-000	F31		36100-MMA-100	F30		43127-B7A-000	F29	
32612-M9Q-000	F31		36500-HMA-900	F26		**44000**		
32620-M9Q-000	F31		**37000**			44301-B9A-000	F27	
32621-M9Q-000	F31		37200-BAC-010	F02		44311-B9A-000	F27	
32622-M9Q-000	F31		37210-B9A-000-IL	F01		44321-B9A-000	F27	
32623-M9Q-000	F31		37211-BAA-000	F02		44601-B9A-100-IT	F27	
32625-M9Q-000	F31		37224-BAA-010	F02		44620-B9A-000	F27	
33000			37800-B9D-010	F19		44720-H9A-000	F28	
33100-BAA-000	F03		37801-B8B-800	F19		44800-BAA-000	F06	
33120-BAA-000	F03		37830-HMC-000	F32		**45000**		
33130-B9A-000	F03		37880-HMC-000	E02		45100-BAA-000-DM	F04	
33400-BAA-000	F03		37890-A5L-000	F33		45121-BAA-000-DM	F27	
33405-B7A-000	F03		**38000**			45126-BAA-000	F04	
33450-BAA-000	F03		38110-BAA-000	F30		45130-BAA-300-A	F04	
33455-B7A-000	F03		38201-B9D-000	F30		45156-B9A-000	F06	
33600-B9A-000	F15		38300-T53-010	F30		45500-BAA-000	F04	
33610-B9A-000	F15		3850A-HLA-010	F30		45509-L4A-300	F04	
33650-B9A-000	F15		38710-BAA-000	F30		45514-L4A-300	F04	
33700-B9A-000	F15		**40000**			45517-BAA-000	F08	
33740-T78-010	F17		40510-B9A-000	F29		45518-BAA-000	F08	
33741-M9A-100	F17		40543-B7A-000	F29		**46000**		
34000			40546-BAA-000	F29		46500-B9A-000	F13	
34901-H9G-000	F03		**41000**			46500-BAA-000	F05	

MODEL: PD25A1-6

PARTS NO. INDEX

2011.09

PARTS NO.	NO.		PARTS NO.	NO.		PARTS NO.	NO.	
46501-B7A-000	F05		52105-B7A-000	F28		61201-B9A-000	F21	
46502-B7A-000	F05		5210A-BAA-000-IL	F29		**64000**		
46515-B7A-900	F13		52170-B9A-010	F29		64301-BAA-000-CA1	F09	
4651A-B7A-000	F13		52400-BAA-000-QQ	F23		64301-BAA-000-GE1	F09	
50000			52505-N02-000	F29		64301-BAA-000-KB1	F09	
5010N-BAB-000-IT	F21		52506-N02-000	F29		64301-BAA-000-QU1	F09	
5020A-BAA-000	F20		52507-N02-000	F29		64301-BAA-000-XJ1	F09	
50246-BAA-000	F21		**53000**			64301-BAA-000-YR1	F09	
50248-B9A-000	F21		53100-BAA-000-IS	F07		64302-B9A-000	F24	
50300-BAA-000	F07		53104-BAA-000-IL	F08		64303-BAA-000	F09	
50301-BAA-000	F07		53131-BAA-010-OE	F07		64304-B9A-000	F01	
5031B-B7A-000	F01		53140-HMA-000	F08		64304-B9A-000	F20	
50321-B9A-000	F24		53166-N02-000	F08		64304-B9A-000	F21	
5033A-B9D-000	F24		53190-BAA-000	F08		64304-X01-000	F16	
50357-BAA-000	F21		53192-203-900	F08		64306-X01-000	F16	
5035A-BAA-000-IT	F21		5319A-BAA-010	F08		64310-BAA-000-CA	F14	
50530-BAA-000-IT	F26		53200-BAA-000	F07		64310-BAA-000-GE	F14	
5053A-B7A-000	F26		53201-B9A-000	F01		64310-BAA-000-KB	F14	
50603-B9A-000	F12		53205-B9A-000-IL	F01		64310-BAA-000-QU	F14	
50603-B9A-000	F13		53207-B9A-000-CA	F01		64310-BAA-000-XJ	F14	
50617-B9A-000-IS	F12		53207-B9A-000-H1GE	F01		64310-BAA-000-YR	F14	
5061B-B9A-000	F13		53207-B9A-000-H1KE	F01		64315-BAA-000	F14	
5061C-B9A-000	F12		53207-B9A-000-H1QU	F01		64321-A5L-000	F30	
5061D-BAA-000-IS	F13		53207-B9A-000-H1XJ	F01		64401-BAA-000-CA1	F09	
50634-B9A-000	F13		53207-B9A-000-H1YE	F01		64401-BAA-000-GE1	F09	
50644-B9A-000	F12		53210-BAA-000-OE	F24		64401-BAA-000-KB1	F09	
50703-R02-000	F22		53211-BAA-000	F07		64401-BAA-000-QU1	F09	
50710-B9A-000	F22		53212-BAA-000	F07		64401-BAA-000-XJ1	F09	
50715-B9A-000	F22		53214-001-010	F07		64401-BAA-000-YR1	F09	
50717-G02-000	F22		53215-001-000	F07		64402-B9A-000	F24	
50718-B9A-000	F22		53220-N02-000	F07		64403-BAA-000	F09	
50719-B9A-000	F22		53231-B9A-000-IL	F07		6440A-BAA-000-CA	F14	
50720-B9A-000	F22		**61000**			6440A-BAA-000-GE	F14	
50722-B9A-000	F22		61100-B9A-000-CA	F10		6440A-BAA-000-KB	F14	
50753-MKL-000	F19		61100-B9A-000-GE	F10		6440A-BAA-000-QU	F14	
51000			61100-B9A-000-KB	F10		6440A-BAA-000-XJ	F14	
51106-BAA-000	F06		61100-B9A-000-QU	F10		6440A-BAA-000-YR	F14	
51400-BAA-010	F06		61100-B9A-000-XJ	F10		64410-BAA-000-CA	F14	
51500-BAA-010	F06		61100-B9A-000-YR	F10		64410-BAA-000-GE	F14	
52000			61201-B9A-000	F01		64410-BAA-000-KB	F14	

MODEL: PD25A1-6

PARTS NO. INDEX

2011.09

PARTS NO.	NO.		PARTS NO.	NO.		PARTS NO.	NO.	
64410-BAA-000-QU	F14		**87000**			90076-N01-000	E09	
64410-BAA-000-XJ	F14		87121-A5W-000-T2	F19		90083-X01-000	E06	
64410-BAA-000-YR	F14		87121-A5W-000-T3	F19		90087-B9A-000-IT	E07	
77000			87121-A5W-000-T3	F19		9008A-B9A-000	E07	
7710A-B9A-000	F18		87121-A5W-000-T3	F19		90102-L4A-000	F04	
77230-B9A-000	F18		87121-A5W-000-T3	F19		90103-B9A-000	F13	
77239-T53-000	F30		87121-A5W-000-T3	F19		90106-B7A-000	F05	
77240-B9A-000	F18		87123-B9D-000	F19		90106-B8B-900	F19	
7730A-B9A-001	F18		87123-B9D-000	F19		90106-B9A-000	F18	
80000			87123-B9D-000	F19		90106-B9A-900	F12	
80101-B9A-010	F17		87123-B9D-000	F19		90106-B9A-900	F13	
80103-B9A-000	F29		87123-B9D-000	F19		90106-B9A-900	F22	
80107-B9A-000	F17		87123-B9D-000	F19		90106-H21-000	F13	
8010B-B9A-010	F17		87127-B7A-900	F24		90106-N02-000	F27	
81000			87127-B7A-900	F24		90106-N02-000	F28	
81300-B9A-000-CA	F18		87128-BAC-000	F16		90107-B7A-000	F05	
81300-B9A-000-GE	F18		87128-BAC-000	F16		90107-V02-000	F33	
81300-B9A-000-KB	F18		87128-BAC-000	F16		90108-B7A-000	F26	
81300-B9A-000-QU	F18		87128-BAC-000	F16		90110-B8G-000	F28	
81300-B9A-000-XJ	F18		87128-BAC-000	F16		90110-H6T-000	F14	
81300-B9A-000-YR	F18		87128-BAC-000	F16		90110-N02-000	F24	
83000			87128-BAC-000	F16		90111-M9Q-800	F20	
83504-B9A-000	F16		87128-BAC-000	F16		90111-M9Q-900	F11	
83505-B9A-000	F16		87128-BAC-000	F16		90111-M9Q-900	F24	
8350A-B7A-000-IL	F24		87128-BAC-000	F16		90111-MMA-000	F33	
83551-M36-000	F19		87128-BAC-000	F16		90111-VS5-000	F29	
83551-M36-000	F21		87128-BAC-000	F16		90112-B9A-000	F22	
8360A-B7A-000-IL	F24		**88000**			90116-BAA-000	F07	
8366A-BAC-000-CA2	F16		88110-B9A-000	F08		90118-B9A-900	F16	
8366A-BAC-000-GE2	F16		88120-B9A-000	F08		9011A-N13-000	F19	
8366A-BAC-000-KB2	F16		**90000**			90121-B9A-000	F29	
8366A-BAC-000-QU2	F16		90002-BAA-000	E01		90136-BAA-000	F08	
8366A-BAC-000-XJ2	F16		90002-R02-000	E11		90145-M9Q-000	F05	
8366A-BAC-000-YR2	F16		90012-HLK-000	E05		90145-MS9-611	F04	
8367A-BAC-000-CA2	F16		90019-B9A-000	F21		90157-F3G-000	E08	
8367A-BAC-000-GE2	F16		90031-HMA-000	E17		90164-B9A-000	F07	
8367A-BAC-000-KB2	F16		90032-HMA-000	E18		90164-MR4-900	F06	
8367A-BAC-000-QU2	F16		90034-BAA-000	E02		90185-B9A-000	F19	
8367A-BAC-000-XJ2	F16		90043-HMA-000	F33		90201-KR8-751-M1	E08	
8367A-BAC-000-YR2	F16		90065-BAA-000	F12		90201-KR8-751-M1	E16	

MODEL: PD25A1-6

PARTS NO. INDEX

2011.09

PARTS NO.	NO.		PARTS NO.	NO.		PARTS NO.	NO.	
90201-N02-000	F12		90741-BAA-000	E16		93404-06012-07	F17	
90206-HLK-000	E05		90899-422-610	F17		93404-06012-07	F29	
90231-N01-000	E11		**91000**			93404-06016-00	E16	
90231-N01-000	E17		91001-BAA-000	E12		93404-06016-07	F26	
90301-M9Q-800	F01		91001-H6B-300	E14		93404-06016-08	F17	
90304-B7A-000	F28		91001-KJ9-005	E21		93500-03008-1A	E10	
90304-L4A-000	F07		91002-BAA-000	E14		93500-05016-0A	E08	
90305-BAA-000	F28		91003-BAA-000	E12		93500-06012-0A	E14	
90305-GE8-003	F29		91004-BAA-000	E15		93500-06025-0H	E10	
90305-VS1-000	F32		91005-BAA-000	E12		93600-06016-0A	E13	
90306-BAA-000	F08		91101-HMA-000	E10		93891-04025-08	F30	
90306-M9Q-000	F27		91103-A3F-000	E10		93891-05012-07	F08	
90308-X04-000	F09		91104-B9A-000	F12		93891-05016-07	F32	
90308-X04-000	F15		91104-BAA-000	E16		93893-06016-07	F06	
90308-X04-000	F17		91104-KN7-670	E16		93894-05014-07	F14	
90309-M9Q-000	F22		91201-B06-000	E15		93901-25380	F17	
90321-315-900	F08		91202-HMA-000	E09		93903-24380	F16	
90401-KJ9-000	E08		91205-KF0-003	E21		93903-25220	F15	
90401-KJ9-000	E16		91206-B06-000	E13		93903-25280	F01	
90402-BAA-000	E11		91252-030-003	F27		93903-25280	F09	
90403-BAA-000	E15		91252-B8G-000	F28		93903-25320	F17	
90404-BAA-000	E15		91256-BAA-000	F06		93903-25380	F15	
90405-BAA-000	E15		91301-HMA-000	E04		93903-25380	F17	
90423-KJ9-000	E21		91302-567-003	E07		93903-35180	F16	
90442-HMA-000	E02		91303-377-000	E07		93903-45480	F09	
90451-B04-000	E13		91303-B08-000	E18		**94000**		
90455-BAA-000	E14		91306-N01-010	E06		94001-05070-0S	F05	
90455-BAA-000	E15		91307-035-000	E09		94001-06000-0S	F13	
90462-B04-000	E14		91510-BAA-000	F05		94001-08000	F29	
90503-B06-000	F07		**92000**			94002-06020-0S	F06	
90522-B8G-000	F28		92101-06010-0H	E15		94002-06020-0S	F12	
90545-M9Q-000	F04		92101-06014-0H	E08		94002-06020-0S	F21	
90545-M9Q-000	F05		92101-06016-0H	E19		94002-10080-0S	F26	
90556-N01-000	F29		92101-06020-0H	E17		94021-08070	F21	
90601-HMA-000	E12		92101-06030-0H	E13		94021-10020-0S	F21	
90652-HMA-000	F32		92800-12000	E18		94050-05070	F17	
90652-REA-000	F32		92900-06028-0B	E02		94050-06000	E19	
90653-HMA-000	E19		**93000**			94050-06000	F25	
90677-GR1-003	F14		93401-05020-07	F21		94050-06070	F01	
90701-HB6-010	E12		93401-06025-07	F20		94050-06070	F05	

MODEL: PD25A1-6

PARTS NO. INDEX

2011.09

PARTS NO.	NO.		PARTS NO.	NO.		PARTS NO.	NO.	
94050-06070	F30		95002-02080	F11		96100-68040-10	E13	
94050-08000	F29		95003-23022-60	F32		96120-60050-10	F28	
94050-10070	F01		95014-62200	F07		96120-62030-10	E15	
94050-10070	F17		95701-06020-07	E18		96120-63030-10	F28	
94050-10070	F21		95701-06020-07	F08		96140-62013-10	E09	
94050-10080	E02		95701-06022-08	E11		96140-63010-10	F27	
94050-10080	F12		95801-06012-07	F04		96211-06000	F07	
94101-08700	F21		95801-06012-07	F17		96211-08000	F22	
94101-10700	F21		95801-06012-07	F21		96220-40100	E13	
94101-14000	F29		95801-06012-08	F18		96700-B9A-000	F07	
94101-16000	F28		95801-06012-08	F21		**CAM CHAIN**		
94102-08800	F12		95801-06016-07	F01		1C14401-RFA-000	E06	
94102-08800	F13		95801-06016-07	F29		1C15141-BAA-000	E10	
94102-10700	F17		95801-06016-08	F24		1C40530-BAA-000	F29	
94103-08000	F22		95801-06020-08	F16		**SPARK PLUG**		
94109-12000	E18		95801-06022-00	F12		1PCR8E-3	E02	
94111-05800	F17		95801-06025-07	F30		**TIRE**		
94111-08800	F21		95801-08012-07	F30		1T011107017-4PR-61	F27	
94111-10700	F21		95801-08040-08	F19		1T011407017-6103	F28	
94201-16200	F12		95801-10050-07	F23		**BATTERY**		
94201-16200	F13		95801-10110-07	F21		1Y01BAA01-Y	F30	
94201-20150	F22		**96000**			**FORK SET**		
94301-08140	E09		96001-06012-08	E10		B9A-MF530-00	F06	
94301-08140	E17		96001-06014-08	E02		B9A-MF535-00	F06	
94301-08140	E18		96001-06014-08	E06		B9A-MF600-00	F06	
94301-08140	E21		96001-06016-07	E01		B9A-MF605-00	F06	
94301-12200	E03		96001-06016-07	E02				
94510-10000	E10		96001-06018-07	E04				
94510-12000	E13		96001-06018-07	E06				
94510-15000	E13		96001-06022-08	E03				
94510-22000	E14		96001-06022-08	E20				
94510-22000	E15		96001-06022-08	E21				
94510-25000	E15		96001-06032-07	E21				
94520-26000	E21		96001-06035-00	E08				
94520-32000	E09		96001-06040-07	E07				
94520-35150	E13		96001-06040-07	E09				
94540-05017	F05		96001-06055-07	E17				
94591-21000	F15		96001-06090-07	E03				
94591-25000	F16		96100-60000-00	E21				
95000			96100-62020-00	E13				

MODEL：PD25A1-6

ITEM	PAGE	ORIGINAL NUMBER	DESCRIPTION	REVISED NUMBER	EFFECTIVE DATE
1	F04	53175-HMA-000	R.HANDLE LEVER	45509-L4A-300	R.HANDLE LEVER SET
2	F04	35340-KBN-900	FR. STOP SW. ASSY(R)	45514-L4A-300	FR.STOP SW.(R)
3	F01			53207-B9A-000-CA	METER VISOR A BU-2935U
4	F09			64301-BAA-000-CA1	R FR COVER BU-2935U
5	F09			64401-BAA-000-CA1	L FR COVER BU-2935U
6	F10			61100-B9A-000-CA	FR FENDER BU-2935U
7	F14			64310-BAA-000-CA	R UNDER SPOILER BU-2935U
8	F14			6440A-BAA-000-CA	UNDER SPOILER ASSY BU-2935U
9	F14			64410-BAA-000-CA	L UNDER SPOILER BU-2935U
10	F16			8366A-BAC-000-CA2	R RR BODY COVER ASSY BU-2935U/GY-7450U
11	F16			8367A-BAC-000-CA2	L RR BODY COVER ASSY BU-2935U/GY-7450U
12	F18			81300-B9A-000-CA	RR CARRIER BU-2935U
13	F19			1751G-BAB-000-CA	FUEL TANK ASSY.BU-2935U
14	F06			91256-BAA-000	DUST COVER
15	F06			B9A-MF530-00	OIL SEAL
16	F06			B9A-MF535-00	OIL SEAL RING CLASP
17	F06			B9A-MF600-00	SCREW INSIDE
18	F06			B9A-MF605-00	INSIDE TUBE ORING
19	F01			53207-B9A-000-H1XJ	METER VISOR A R-187UL
20	F09			64301-BAA-000-XJ1	R FR COVER R-187UL
21	F09			64401-BAA-000-XJ1	L FR COVER R-187UL
22	F10			61100-B9A-000-XJ	FR FENDER R-187UL
23	F14			64310-BAA-000-XJ	R UNDER SPOILER (R-187UL)
24	F14			6440A-BAA-000-XJ	UNDER SPOILER ASSY. (R-187UL)
25	F14			64410-BAA-000-XJ	L UNDER SPOILER (R-187UL)
26	F16			8366A-BAC-000-XJ2	R RR BODY COVER ASSY R-187UL/GY-7450U
27	F16			8367A-BAC-000-XJ2	L RR BODY COVER ASSY R-187UL/GY-7450U
28	F18			81300-B9A-000-XJ	RR CARRIER R-187UL
29	F19			17510-B9A-010-XJ	FUEL TANK COMP.R-187UL
30	F02			37211-BAA-000	METER LENS
31	F14			64315-BAA-000	HEAT PROOF PANEL
32	F28			41201-BAA-000	FINAL DRIVEN SPROCKET
33	F28			90110-B8G-000	STUD BOLT 10X39.5
34	F28			90305-BAA-000	U NUT 10MM
35	F28			90522-B8G-000	TONGUED WASHER 1.2MM

36	F28			96120-60050-10	BALL BRG. 6005Z
37					
38					
39					
40					
41					
42					
43					
44					
45					
46					
47					
48					
49					
50					
51					
52					
53					
54					
55					
56					
57					
58					
59					
60					
61					
62					
63					
64					
65					
66					
67					
68					
69					
70					
71					
72					

73					
74					
75					
76					
77					
78					
79					
80					
81					
82					
83					
84					
85					
86					
87					
88					
89					
90					
91					
92					
93					
94					
95					
96					
97					
98					
99					
100					
101					
102					
103					
104					
105					
106					
107					
108					
109					

110					
111					
112					
113					
114					
115					
116					
117					
118					
119					
120					
121					
122					
123					
124					
125					
126					
127					
128					
129					
130					
131					
132					
133					
134					
135					
136					
137					
138					
139					
140					
141					
142					
143					
144					
145					
146					

147					
148					
149					
150					
151					
152					
153					
154					
155					
156					
157					
158					
159					
160					
161					
162					
163					
164					
165					
166					
167					
168					
169					
170					
171					
172					
173					
174					
175					
176					
177					
178					
179					
180					
181					
182					
183					

184					
185					
186					
187					
188					
189					
190					
191					
192					
193					
194					
195					
196					
197					
198					
199					
200					
201					
202					
203					
204					
205					
206					
207					
208					
209					
210					
211					
212					
213					
214					
215					
216					
217					
218					
219					
220					

221					
222					
223					
224					
225					
226					
227					
228					
229					
230					
231					
232					
233					
234					
235					
236					
237					
238					
239					
240					
241					
242					
243					
244					
245					
246					
247					
248					
249					
250					
251					
252					
253					
254					
255					
256					
257					

258					
259					
260					
261					
262					
263					
264					
265					
266					
267					
268					
269					
270					
271					
272					
273					
274					
275					
276					
277					
278					
279					
280					
281					
282					
283					
284					
285					
286					
287					
288					
289					
290					
291					
292					
293					
294					

295					
296					
297					
298					
299					
300					
301					
302					
303					
304					
305					
306					
307					
308					
309					
310					
311					
312					
313					
314					
315					
316					
317					
318					
319					
320					
321					
322					
323					
324					
325					
326					
327					
328					
329					
330					
331					

332					
333					
334					
335					
336					
337					
338					
339					
340					
341					
342					
343					
344					
345					
346					
347					
348					
349					
350					
351					
352					
353					
354					
355					
356					
357					
358					

REVISE DATE	CHANGE DETAILS	MODIFIED BY
2011/9/28	REVISED	SAM
2011/9/28	REVISED	SAM
2011/10/11	ADD	SAM
2011/10/11	ADD	SAM
2011/10/11	ADD	SAM
2011/10/11	ADD	SAM
2011/10/11	ADD	SAM
2011/10/11	ADD	SAM
2011/10/11	ADD	SAM
2011/10/11	ADD	SAM
2011/10/11	ADD	SAM
2011/10/11	ADD	SAM
2011/10/11	ADD	SAM
2011/10/11	ADD	SAM
2011/10/11	ADD	SAM
2011/10/11	ADD	SAM
2011/10/11	ADD	SAM
2011/10/11	ADD	SAM
2011/10/11	ADD	SAM
2011/10/12	ADD	SAM
2011/10/12	ADD	SAM
2011/10/12	ADD	SAM
2011/10/12	ADD	SAM
2011/10/12	ADD	SAM
2011/10/12	ADD	SAM
2011/10/12	ADD	SAM
2011/10/12	ADD	SAM
2011/10/12	ADD	SAM
2011/10/12	ADD	SAM
2011/10/12	ADD	SAM
2011/10/12	ADD	SAM
2011/10/13	ADD	SAM
2011/10/18	ADD	SAM
2011/10/18	ADD	SAM
2011/10/18	ADD	SAM
2011/10/18	ADD	SAM

2011/10/18	ADD	SAM

零件書各頁次及主分件確認

引擎件

頁次	英文名稱	確認	審核
E01	CYL.HEAD COVER ASSY	○	○
E02	CYLINDER HEAD ASSY	○	○
E03	CYLINDER SET	○	○
E04	CYL.HEAD SIDE COVER ASSY	○	○
E05	IN/EXH.VALVE	○	○
E06	CAM SHAFT COMP	○	○
E07	L.CRANK CASE COVER	○	○
E08	AC.GEN ASSY	○	○
E09	R.CRANK CASE COVER	○	○
E10	OIL PUMP ASSY	○	○
E11	CLUTCH CENTER ASSY	○	○
E12	CRANK SHAFT COMP	○	○
E13	GEAR SHIFT SPINDLE ASSY	○	○
E14	MAIN SHAFT ASSY	○	○
E15	COUNTER SHAFT ASSY	○	○
E16	BALANCE SHAFT DRIVE GEAR	○	○
E17	R.CRANK CASE COMP	○	○
E18	L.CRANK CASE COMP	○	○
E19	IN PIPE&THROTTLE BODY ASSY	○	○
E20	START.MOTOR&START GEAR	○	○
E21	WATER PUMP COVER ASSY.	○	○

車架件

頁次	英文名稱	確認	審核
F01	FR.HANDLE COVER	○	○
F02	SPEEDOMETER ASSY	○	○
F03	HEAD LIGHT&FR.WINKER ASSY	○	○
F04	FR.BRAKE ASSY	○	○
F05	RR.BRAKE ASSY	○	○
F06	FR.CUSHION SET	○	○
F07	STRG.STEM COMP	○	○
F08	L/R.HANDLE SW ASSY	○	○
F09	FR COVER ASSY	○	○
F10	FR.FENDER SET	○	○
F11	RESERVE TANK ASSY	○	○
F12	GEAR CHANGE ASSY	○	○
F13	BRAKE PEDAL ASSY		

頁次	英文名稱
F14	UNDER SPOILER AS
F15	TAIL LIGHT&RR.WIN
F16	BODY COVER ASSY
F17	RR.FENDER
F18	DOUBLE SEAT&RR (
F19	FUEL TANK COMP
F20	RADIATOR COMP A
F21	FRAME BODY COMI
F22	L/R.PILLION STEP A
F23	RR.CUSHION ASSY
F24	L.COVER DUCT&BA
F25	A.I.S.V.UNIT
F26	SIDE STAND COMP
F27	FR. WHEEL
F28	RR.WHEEL
F29	RR.FORK ASSY
F30	ELECTRICAL PARTS
F31	WIRE HARNESS
F32	AIR CLEANER ASSY
F33	EXH.MUFFLER ASSY

須注意的零件料號

料號	英文名稱	備註	確認	審核	自建碼	
12100-XXX-000-A	CYLINDER SET	須建立整組號碼	○	○	1B	DRIVE
17200-XXX-000	AIR/C ASSY	須拆分件	○	○	1C	CAM (
18000-XXX-000	EX. MUFFLER ASSY	須拆分件	○	○	1M	OIL

32100-XXX-000	WIRE HARNESS	須拆分件	○	○	1P	SPARI
33100-XXX-000	HADEL LIGHT ASSY	分件是否可拆	○	○	1T	TIRE
37200-XXX-000	METER ASSY	分件是否可拆	○	○	1Y	BATTE
45100-XXX-000	CALIPER ASSY	須拆分件	○	○		化油器
45105-XXX-000-A	BRAKE PAD SET	須建立整組號碼	○	○	圖面方向性	
					小圖超連結至	
					製作	
					蕭裕憲	

○代表完成

車架件		
	確認	審核
SY	○	○
NKER ASSY	○	○
	○	○
	○	○
CARRIER	○	○
	○	○
SSY	○	○
P	○	○
SSY	○	○
	○	○
TTERY CASE	○	○
	○	○
	○	○
	○	○
	○	○
	○	○
	○	○
	○	○
	○	○
	○	○

其他注意事項			
		確認	審核
E BELT	驅動皮帶	○	○
CHAIN	凸輪鏈條	○	○
	油類	○	○

K PLUGS	火星塞	○	○
	輪胎	○	○
ERY	電池	○	○
器修理包			
		V	○
各頁面		V	○

審核	製作日期
李政龍	2011/9/23