CONTENTS—ENGINE GROUP

E01 CYINDER HEAD	**E02** ECU ASSY	**E03** CYL HEAD SIDE COVER
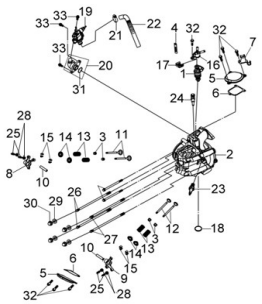	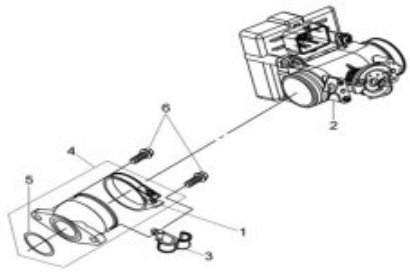	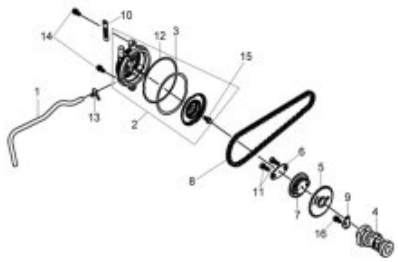
E04 CYLINDER	**E05** CRANK SHAFT	**E06** FLYWHEEL
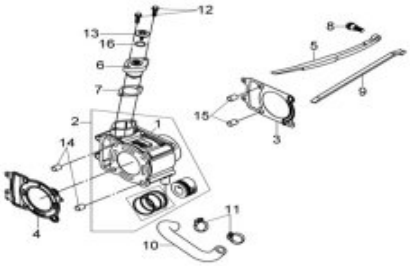	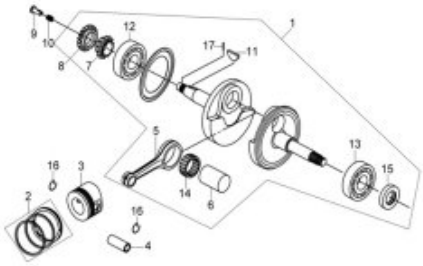	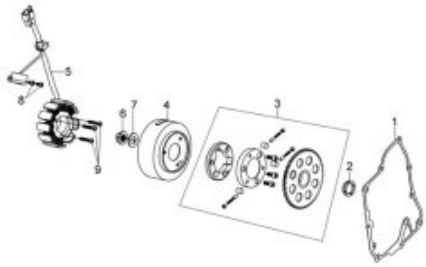
E07 MOVABLE DRIVE FACE	**E08** DRIVE PULLEY	**E09** R CASE COVER
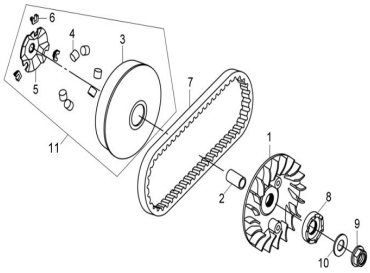	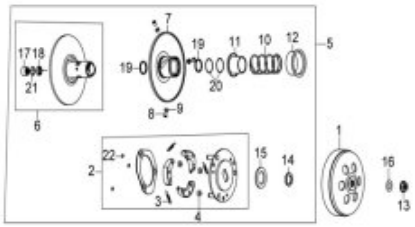	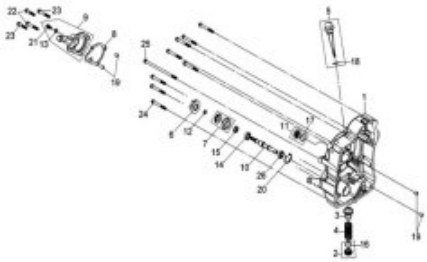
E10 R. CRANK CASE	**E11** L. CRANK CASE COMP	**E12** L. CRANK CASE COVER
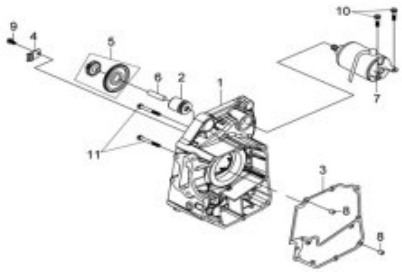	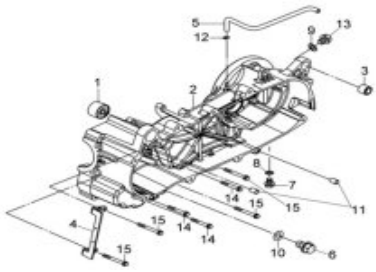	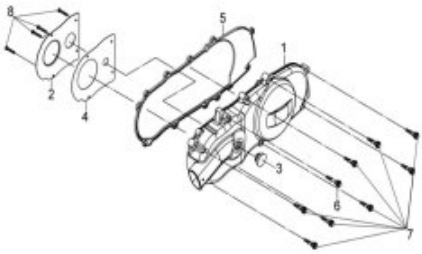

CONTENTS—ENGINE GROUP

E13

MISSION COVER

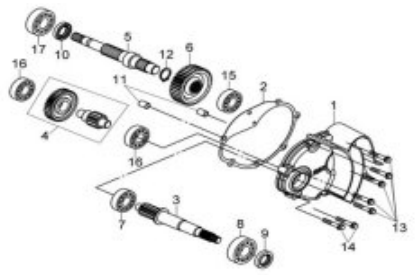

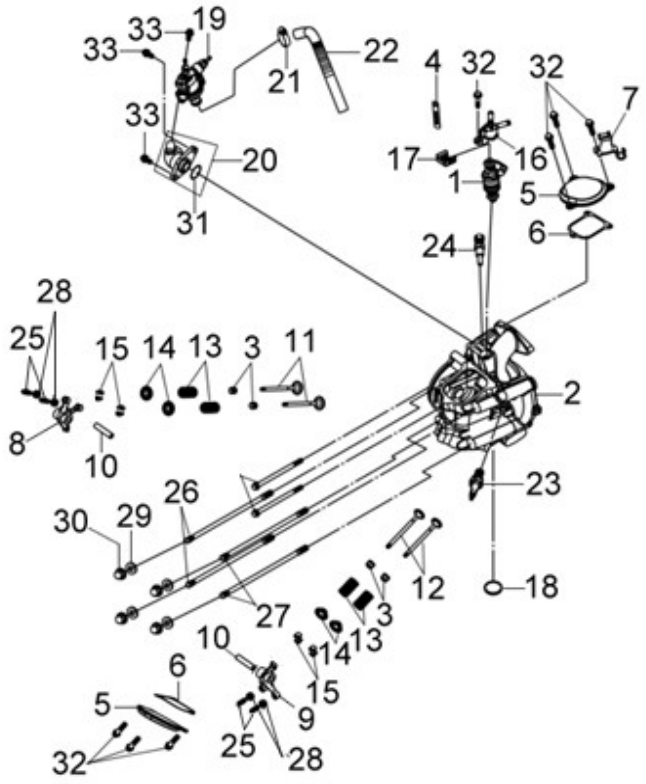

Pictures reference only

	PARTS NUMBER	DESCRIPTION	QTY	EFFECTIVE DATE	
1	06414-LVA-000	INIETTORE	1		
2	12200-LVA-000	TESTA CILINDRO	1		
3	12209-H6B-900	PARAOLIO VALVOLA 4.3mm	4		
4	12342-G02-000	CLAMP	1		
5	12361-H9A-000	TAPPO REGISTRO VALVOLE	2		
6	12362-H9A-000	GUARNIZIONE TAPPO REGISTRO VALVOLE	2		
7	12363-H9A-000	IGNITION CORD CLAMP	1		
8	14431-H9A-000-F2	BILANCERE ASPIRAZIONE	1		
9	14441-H9A-000-F2	BILANCERE SCARICO	1		
10	14451-H6B-000	PERNO BILANCERE	2		
11	14711-H9A-000	VALVOLA ASPIRAZIONE	2		
12	14721-H9A-000	VALVOLA SCARICO	2		
13	14751-H6B-000	MOLLA VALVOLA ESTERNA	4		
14	14771-H6B-000	SCODELLINO MOLLA VALVOLA	4		
15	14781-M9Q-000-A	SEMICONO VALVOLA (SET)	8		
16	17120-LVA-000	FUEL INJUCTOR CAP	1		
17	17121-H6Y-000	FUEL INJECTOR CUP CLIP	1		
18	18291-H9A-000	GUARNIZIONE SCARICO	1		
19	1930A-H9A-000	ALLOGGIAMENTO TERMOSTATO COMPLETO	1		
19-1	19300-H01-000	TERMOSTATO	1		
19-2	19310-KV7-900	ALLOGGIAMENTO TERMOSTATO	1		
19-3	19315-H9A-000	COPERCHIO TERMOSTATO	1		
19-4	37750-PC1-004	BULBO TEMPARATURA (TESTA)	1		
19-5	91301-KV7-671-M1	O-RING 14.8X1.9	1		
19-6	96001-06016-08	FLANGE BOLT 6X16	2		

20	1931A-H9A-000		SUPPORTO TERMOSTATO	1			
21	19505-KS6-700		FASCETTA TUBO RADIATORE	1			
22	1950A-H9A-000		TUBO ACQUA COMPLETO	1			
23	1PCR7E-3		CANDELA NGK CR7E	1			
24	37880-HLK-000		COOLANT TEMP. SENSOR	1			
25	90012-M9Q-000		VITE REGISTRO VALVOLE	4			
26	90031-HLK-000		CYL. STUD BOLT A	2			
27	90032-HLK-000		CYLINDER STUD BOLT B	2			
28	90206-HLK-000		DADO REGISTRO VALVOLA	4			
29	90442-HLK-000		SEALING WASHER 9MM	4			
30	90443-HLK-000		CAP NUT 9MM	4			
31	91301-H9A-000		O-RING 19.8X2.4	1			
32	96001-06016-08		FLANGE BOLT 6X16	7			
33	96001-06020-08	N/A	VITE FLANGIATA 6X20	3			

※ Please check the color & stripe information according to the color index ! **TEAMWORLD IND. 2010.03**

※N/A = SUBSTITUTE ※Y = EXCHANGEABLE ※N =NOT EXCHANGEABLE

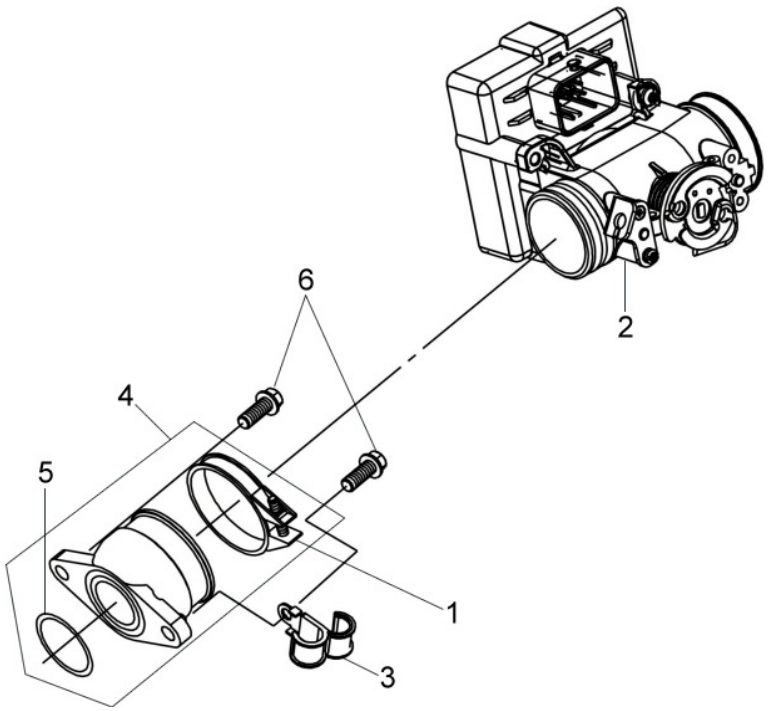

Pictures reference only

	PARTS NUMBER		DESCRIPTION	QTY	EFFECTIVE DATE	
1	16219-LVA-000		INLET PIPE BAND 50	1		
2	16400-LVA-000-02		CENTRALINA E.C.U. SET	1		
3	17114-LVA-000		FUEL TUBE CLAMP	1		
4	1711A-LVA-000		COLLETTORE ASPIRAZIONE	1		
5	91308-M9Q-000		O-RING 27X2	1		
6	96001-06020-08	N/A	VITE FLANGIATA 6X20	2		

※ Please check the color & stripe information according to the color index ! **TEAMWORLD IND. 2010.03**

※N/A = SUBSTITUTE ※Y = EXCHANGEABLE ※N =NOT EXCHANGEABLE

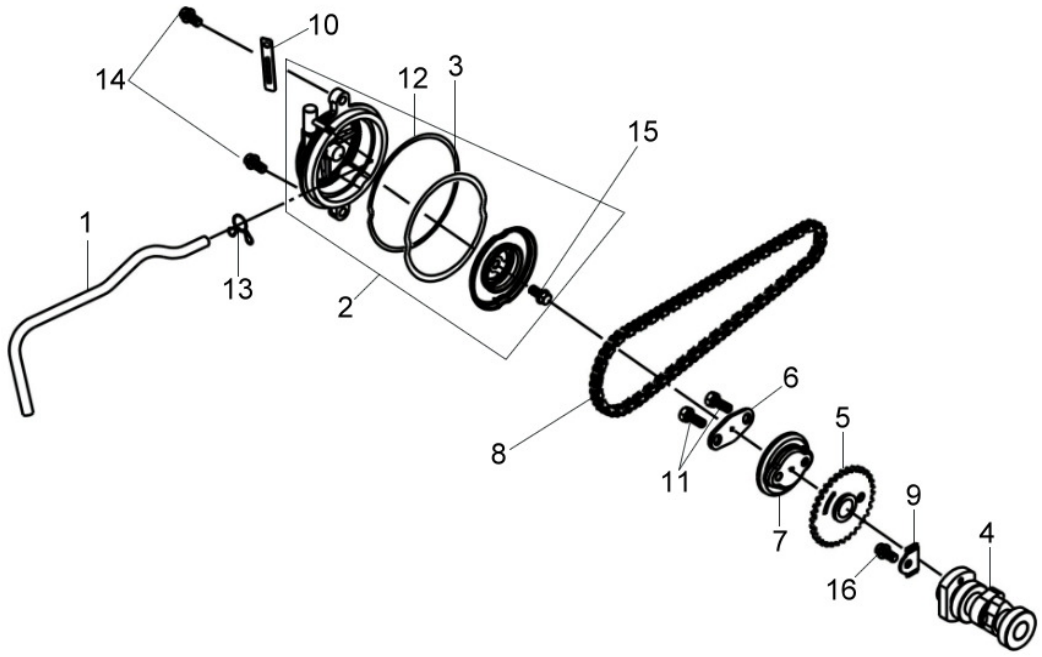

Pictures reference only

	PARTS NUMBER	DESCRIPTION	QTY	EFFECTIVE DATE	
1	11211-LTA-000	TUBO SFIATO	1		
2	12300-H9A-000	COPERCHIO ALBERO A CAMME COMPLETO	1		
3	12351-M36-000	ANELLO ORING 64X3.5MM =H5K	1		
4	14100-H9A-000	ALBERO A CAMME	1		
5	14105-A31-000	INGRANAGGIO ALBERO A CAMME	1		
6	14105-X01-000	PIASTRINA INGR.ALBERO A CAMME	1		
7	14108-M36-000	DISCO ALBERO A CAMME	1		
8	1C14401-M92-000	CATENA DISTRIBUZIONE	1		
9	14457-H9A-000	PIASTRINA GUIDA CATENA DISTRIBUZIONE	1		
10	12363-H9A-000	IGNITION CORD CLAMP	1		
11	90083-X01-000	LOCK BOLT 6MM	2		
12	91301-B06-000	O-RING 75X2.5	1		
13	95002-50000	TUBE CLIP C9 5MM	1		
14	95701-06020-08	FLANGE BOLT	2		
15	96001-06010-08	VITE FLANGIATA 6X10	1		
16	96001-06014-08	VITE FLANGIATA 6X14	1		

※ Please check the color & stripe information according to the color index ! **TEAMWORLD IND. 2010.03**

※N/A = SUBSTITUTE ※Y = EXCHANGEABLE ※N =NOT EXCHANGEABLE

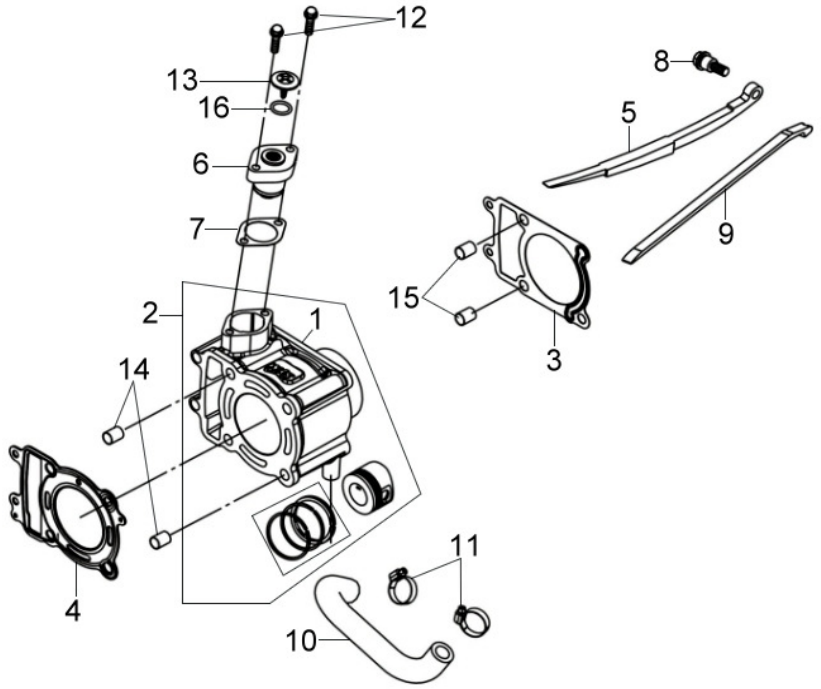

Pictures reference only

	PARTS NUMBER	DESCRIPTION	QTY	EFFECTIVE DATE	
1	12100-HLA-010	CILINDRO	1		
2	12100-HLA-010-A	CILINDRO+PISTONE+FASCE	1		
3	12191-HLK-000	GUARNIZIONE BASE CILINDRO	1		
4	12251-LVA-000	GUARNIZIONE TESTA	1		
5	14510-H9A-000	PATTINO TENDICATENA DISTRIBUZIONE	1		
6	14520-M9Q-000	TENDICATENA DISTRIBUZIONE	1		
7	14523-M9Q-000	GUARNIZIONE TENDICATENA DISTR.	1		
8	14531-KJ9-000	PERNO PATTINO CATENA	1		
9	14610-KV7-900	PATTINO GUIDA CATENA DISTRIB.	1		
10	19502-H9A-000	TUBO ACQUA	1		
11	19505-KS6-700	FASCETTA TUBO RADIATORE	2		
12	90001-M9Q-000	VITE FLANGIATA 6X22	2		
13	90005-M9Q-000	PAN SCREW 6X6	1		
14	90703-M8Q-000	DOWEL PIN10X14	2		
15	90704-HLK-000	DOWEL PIN 11X14	2		
16	91306-M9Q-000	O-RING 1.5x9.5	1		

※ Please check the color & stripe information according to the color index ! **TEAMWORLD IND. 2010.03**

※N/A = SUBSTITUTE ※Y = EXCHANGEABLE ※N =NOT EXCHANGEABLE

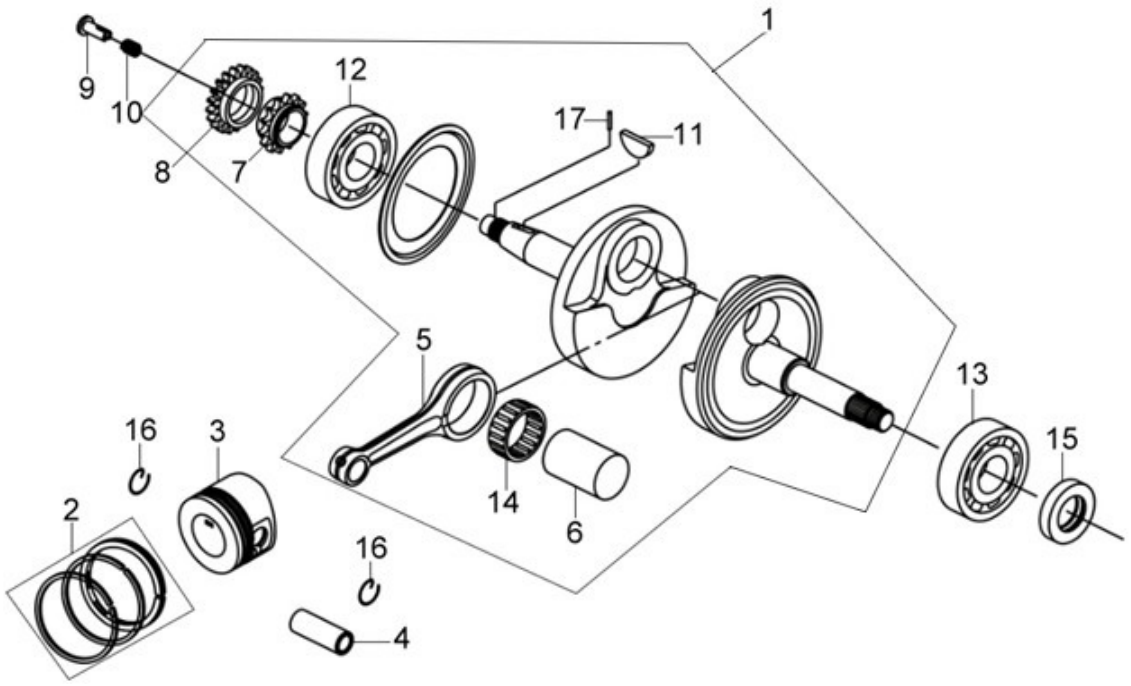

Pictures reference only

	PARTS NUMBER	DESCRIPTION	QTY	EFFECTIVE DATE	
1	13000-LTA-300	ALBERO MOTORE	1		
2	13010-HLA-000	SERIE SEGMENTI	1		
3	13101-HLA-000	PISTONE	1		
4	13111-M4Q-000	SPINOTTO PISTONE 15x43 mm	1		
5	13201-HLA-000	BIELLA	1		
6	13381-HGC-000	ASSE BIELLA	1		
7	14311-H9A-300	PIGNONE CATENA DISTRIBUZIONE	1		
8	15134-HHA-000	OIL PUMP DRIVE SPROCKET	1		
9	15441-149-000	VALVOLA OLIO	1		
10	15447-149-000	MOLLA VALVOLA OLIO	1		
11	90701-HB6-010	CHIAVELLA VOLANO 25X14X4	1		
12	91001-H9A-000	RADIAL BALL BRG. 6305JR2	1		
13	91002-H9A-000	CUSCINETTO A SFERE TMB3/28*2JR2V4	1		
14	91101-HLA-000	GABBIA A RULLI 38X30X13.8	1		
15	91261-415-003	PARAOLIO 25x40x8	1		
16	94601-15000	ANELLINO FERMA SPINOTTO 15MM	2		
17	96220-20118	RULLO 2X11.8	1		

※ Please check the color & stripe information according to the color index ! **TEAMWORLD IND. 2010.03**

※N/A = SUBSTITUTE ※Y = EXCHANGEABLE ※N =NOT EXCHANGEABLE

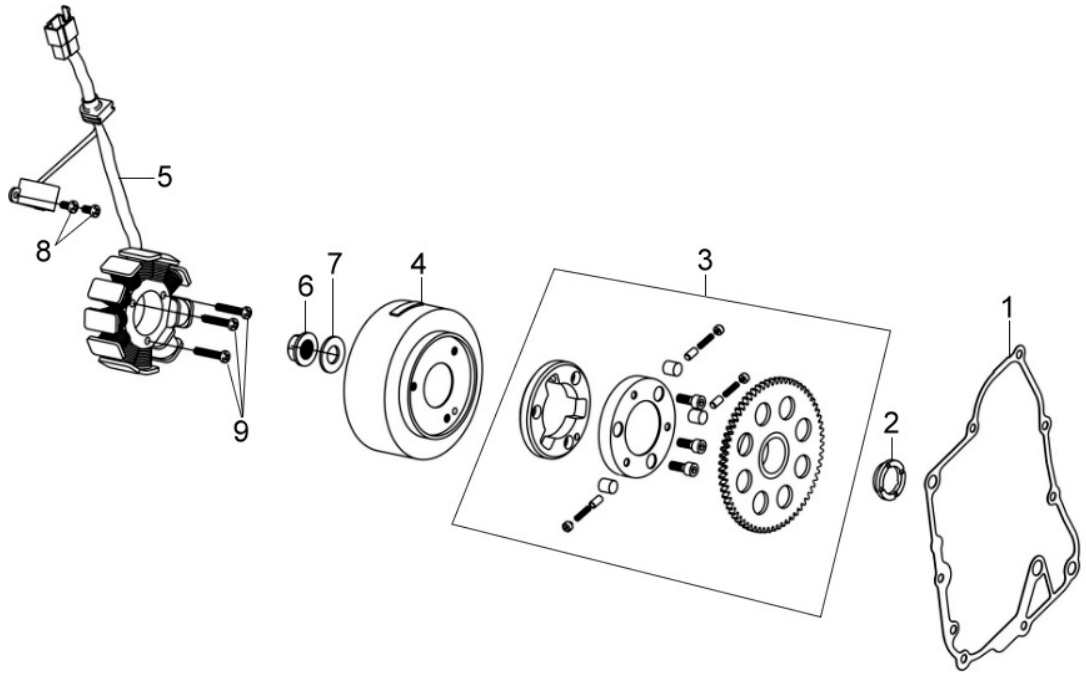

Pictures reference only

	PARTS NUMBER	DESCRIPTION	QTY	EFFECTIVE DATE	
1	11394-H9A-000	GUARNIZIONE COPPA OLIO	1		
2	28115-H9A-000	BOCCOLA	1		
3	2812A-V01-000	RUOTA LIBERA COMPLETA	1		
4	31110-LVA-000	ROTORE STATORE VOLANO	1		
5	31120-LVA-000	STATORE VOLANO	1		
6	90201-KR8-751-M1	DADO FLANGIATO 14MM	1		
7	90401-KJ9-000	RONDELLA RASAMENTO 14X28X2	1		
8	93500-05016-0A	PAN SCREW 5X16	2		
9	93500-05035-0A	PAN SCREW 5X35	3		

※ Please check the color & stripe information according to the color index ! **TEAMWORLD IND. 2010.03**

※N/A = SUBSTITUTE ※Y = EXCHANGEABLE ※N =NOT EXCHANGEABLE

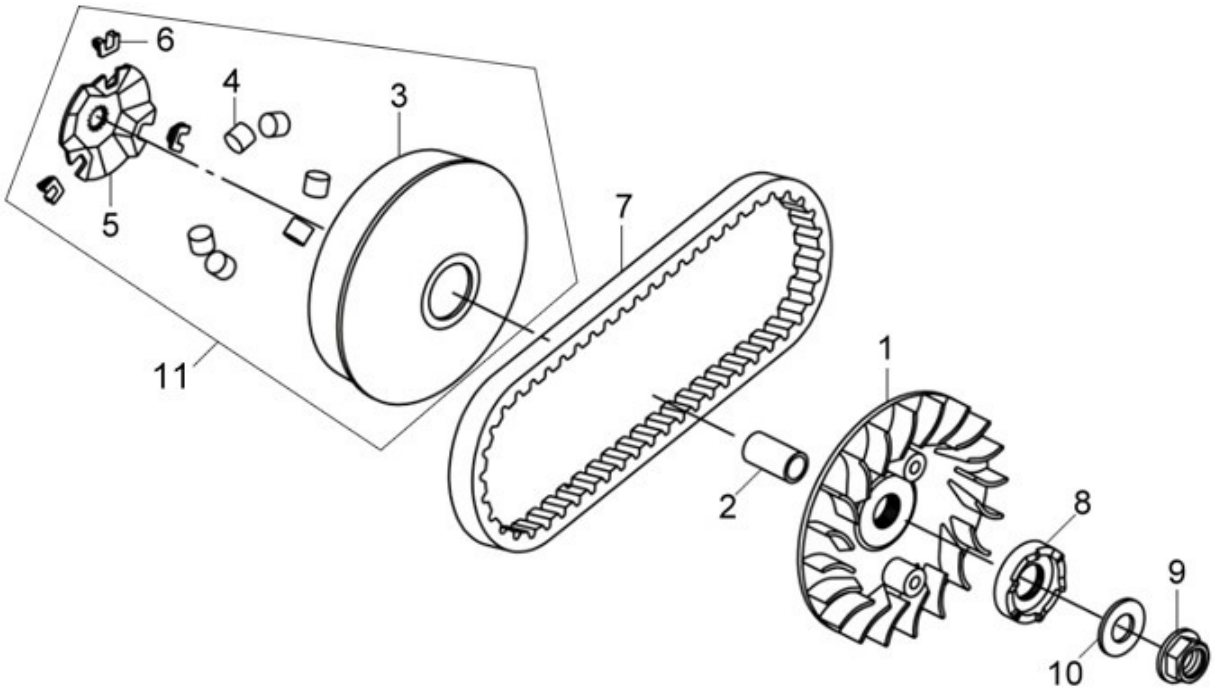

Pictures reference only

	PARTS NUMBER	DESCRIPTION	QTY	EFFECTIVE DATE	
1	22102-RA1-000	PULEGGIA PRIMARIA FISSA	1		
2	22105-H9A-000	BOCCOLA PULEGG. PRIMARIA	1		
3	22110-LVA-000	PULEGGIA PRIMARIA MOBILE	1		
4	22121-X06-900-A	SERIE RULLI VARIATORE 13.4g	1		
5	22131-LVA-000	RAMPA RULLI PORTA TASSELLI	1		
6	22132-HLA-000-A	SERIE TASSELLI(3 pz)	3		
7	1B01HLK01	CINGHIA TRAPEZ. 818.86X18.7X28	1		
8	28231-H01-000	SCODELLINO MESSA IN MOTO	1		
9	90201-KR8-751-M1	DADO FLANGIATO 14MM	1		
10	90401-KJ9-000	RONDELLA RASAMENTO 14X28X2	1		
11	22000-LVA-000	VARIATORE COMPLETO	1		

※ Please check the color & stripe information according to the color index ! **TEAMWORLD IND. 2010.03**

※N/A = SUBSTITUTE ※Y = EXCHANGEABLE ※N =NOT EXCHANGEABLE

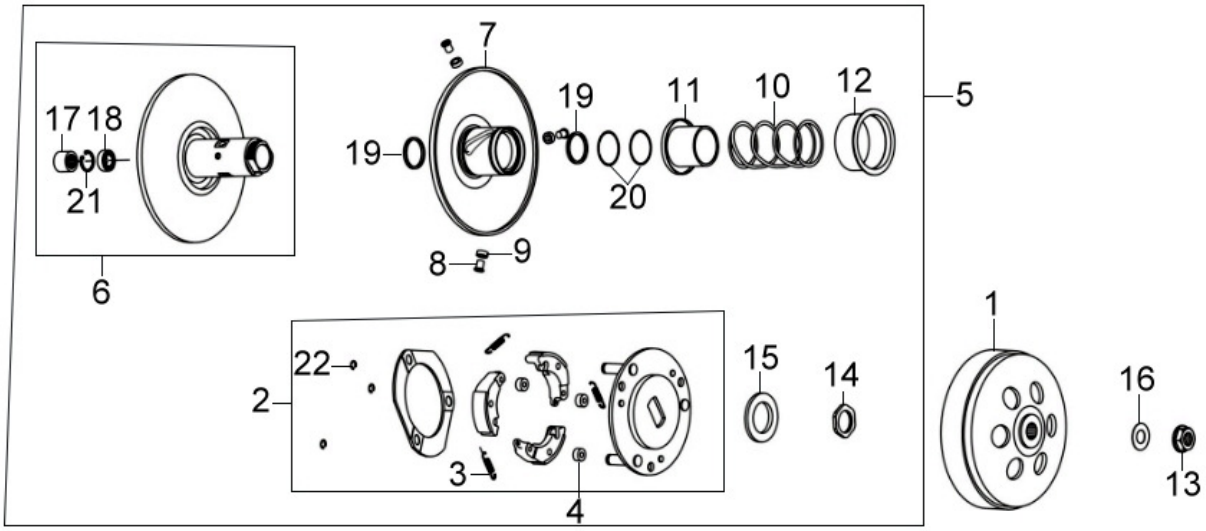

Pictures reference only

	PARTS NUMBER		DESCRIPTION	QTY	EFFECTIVE DATE	
1	22101-KV7-900		CAMPANA FRIZIONE	1		
2	22300-H93-000	N/A	FRIZIONE CENTRIFUGA	1		
3	22401-X06-000		MOLLA MASSETTA FRIZIONE	3		
4	22804-M9Q-000		GOMMINO PARASTRAPPI	3		
5	23010-H93-000	N/A	PULEGGIA SECONDARIA COMPLETA	1		
6	23200-M4Q-000		PULEGGIA SECONDARIA FISSA COMPLETA	1		
7	23220-H9A-000		PULEGGIA SECONDARIA MOBILE	1		
8	23225-M9Q-000		PERNO RULLINO GUIDA VARIATORE	3		
9	23226-M9Q-000		RULLINO GUIDA VARIATORE	3		
10	23233-KN7-670		MOLLA CONTRASTO VARIATORE	1		
11	23237-KG8-900	N/A	SCODELLINO PORTAMOLLA	1		
12	23238-M9Q-000		SCODELLINO PORTAMOLLA ESTERNO	1		
13	90203-M9Q-000		DADO FALNGIATO 12MM	1		
14	90202-M9Q-000		DADO SPECIALE 28MM	1		
15	90403-KN7-670		RONDELLA RASAMENTO 28X44X1.5	1		
16	90441-KV7-900		RONDELLA 12.2X29X2.5	1		
17	91001-H6T-300	N/A	CUSCINETTO A RULLI 20X29X18	1		
18	91002-H6B-300	N/A	CUSCINETTO A SFERE 6902LUC3/4E	1		
19	91211-M8Q-000		PARAOLIO 34x41x4	2		
20	91384-M9Q-000		O-RING 38.8x1.9	2		
21	94520-28000		ANELLO SEEGER 28MM	1		
22	94540-07010	N/A	ANELLO SEEGER 7MM	3		

※ Please check the color & stripe information according to the color index ! **TEAMWORLD IND. 2010.03**

※N/A = SUBSTITUTE ※Y = EXCHANGEABLE ※N =NOT EXCHANGEABLE

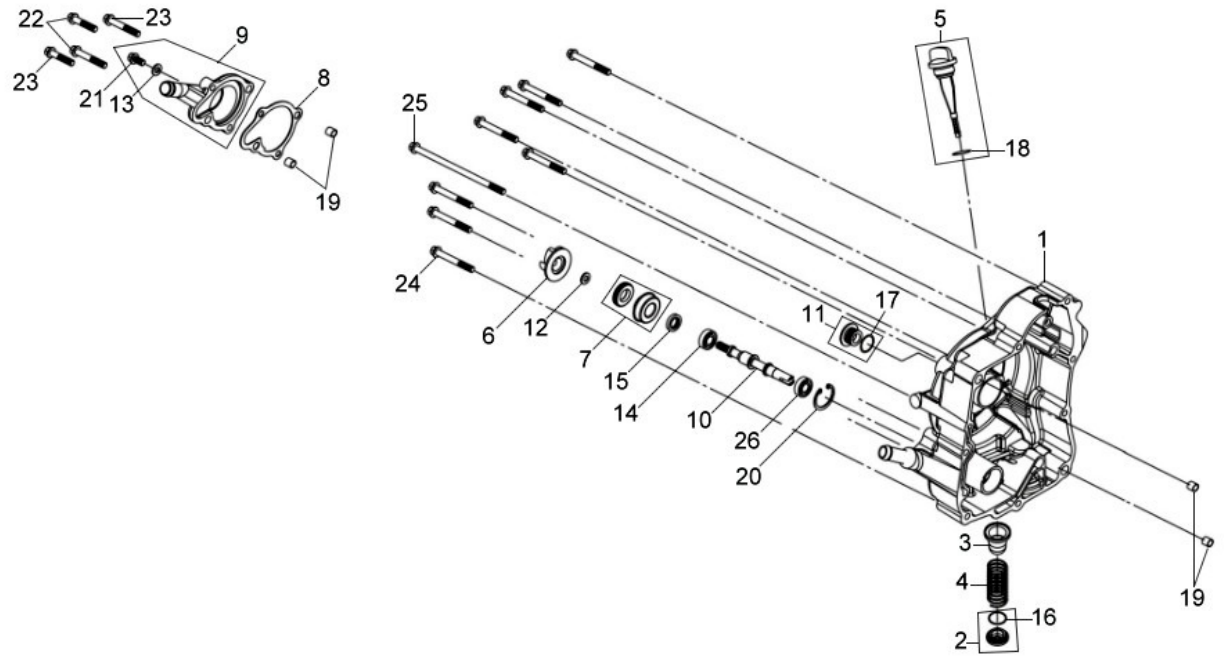

Pictures reference only

	PARTS NUMBER		DESCRIPTION	QTY	EFFECTIVE DATE	
1	11330-LVA-000-H1		COPPA OLIO	1		
2	1236A-V02-000		TAPPO SCARICO OLIO + GUARNIZIONE	1		
3	15421-M9Q-000	N/A	FILTRO OLIO	1		
4	15426-M9Q-000	N/A	MOLLA FILTRO OLIO	1		
5	1565A-H9A-000		TAPPO ALIMENTAZIONE OLIO	1		
6	19215-HLA-000		GIRANTE POMPA ACQUA	1		
7	19217-H9A-300		GUARNIZIONE MECCANICA	1		
8	19229-H9A-000		GUARNIZIONE POMPA ACQUA	1		
9	1922A-HLA-000		CORPO POMPA ACQUA	1		
10	19231-KJ9-010		ALBERO POMPA ACQUA	1		
11	9008A-H9A-000		TAPPO+O-RNG 14MM	1		
12	90423-KJ9-000		RONDELLA 7.2X13X1.2	1		
13	90478-700-000		RONDELLA 6MM	1		
14	91001-KJ9-005		CUSCINETTO A SFERE 6901	1		
15	91205-KF0-003		PARAOLIO 12x20x5	1		
16	91302-M9Q-000		O-RING 30.8MM	1		
17	91303-M2Q-000	N/A	O-RING 13.8x2.5	1		
18	91307-M8Q-000	N/A	O-RING 18X3	1		
19	94301-08140		DOWEL PIN 8X14	4		
20	94520-26000		ANELLO SEEGER 26MM	1		
21	96001-06010-00		SH FLANGE BOLT 6X10	1		
22	96001-06022-00		VITE FLANGIATA 6X22	2		
23	96001-06032-00		VITE FLANGIATA 6X32	2		
24	96001-06050-00		VITE FLANGIATA 6X50	8		
25	96001-06125-00		FLANGE BOLT SH	1		
26	96100-60000-00		CUSCINETTO A SFERE 6000CM	1		

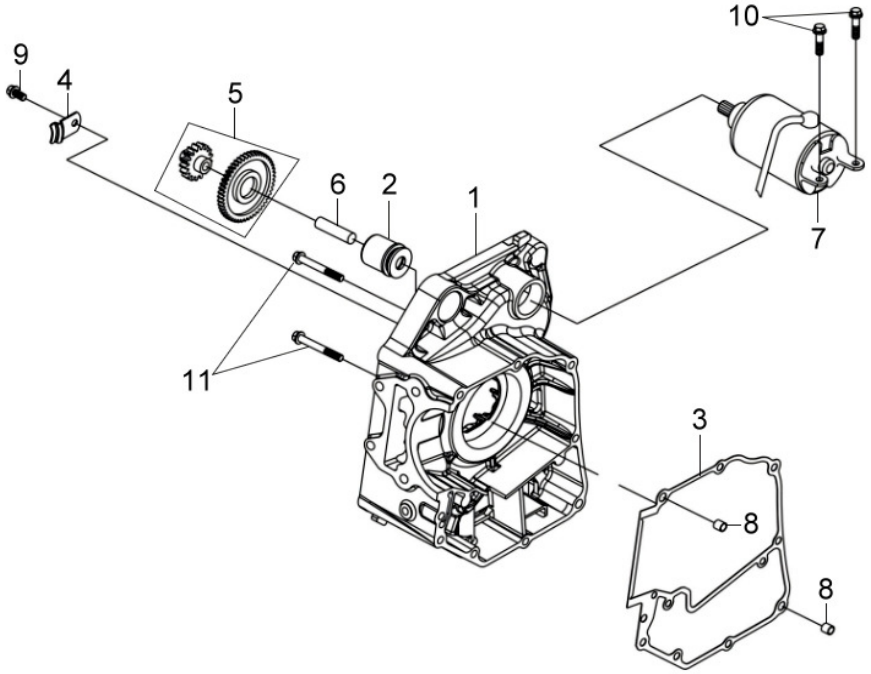

Pictures reference only

	PARTS NUMBER	DESCRIPTION	QTY	EFFECTIVE DATE	
1	11100-H9B-010	CARTER MOTORE	1		
2	11102-H9A-300	SILENT BLOCK MOTORE	1		
3	11191-H9A-000	GUARN.CENTR.SEMICARTER	1		
4	14151-H9A-000	GUIDA CATENA DISTRIBUZIONE	1		
5	28100-H9A-000	INGRANAGGIO RIDUZIONE MOTORINO AVVIAM.	1		
6	28102-H9A-000	PERNO INGRANAGGIO	1		
7	31200-HLA-000	MOTORINO AVVIAMENTO	1		
8	94301-08140	DOWEL PIN 8X14	2		
9	96001-06010-08	VITE FLANGIATA 6X10	1		
10	96001-06022-00	VITE FLANGIATA 6X22	2		
11	96001-06050-08	FLANGE BOLT SH 6X50	2		

※ Please check the color & stripe information according to the color index **TEAMWORLD IND. 2010.03**

※N/A = SUBSTITUTE ※Y = EXCHANGEABLE ※N =NOT EXCHANGEABLE

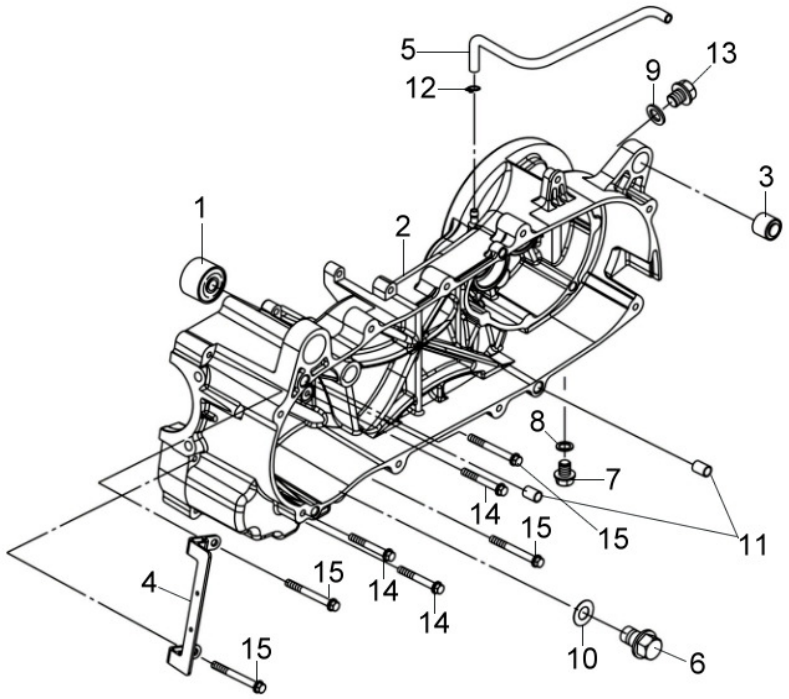

Pictures reference only

	PARTS NUMBER		DESCRIPTION	QTY	EFFECTIVE DATE	
1	11102-H9A-300		SILENT BLOCK MOTORE	1		
2	11200-H9B-010		SEMICARTER MOTORE LATO FRIZIONE alt.	1		
3	11203-M9Q-300	N/A	SILENT BLOCK AMMORTIZZATORE	1		
4	11208-HLK-000		IGNITION COIL STAY	1		
5	11221-LTA-000		TUBO SFIATO	1		
6	90002-H94-000		DRAIN PLUG BOLT	1		
7	90103-M9Q-000	N/A	VITE SPECIALE 8MM	1		
8	90474-M9Q-000		RONDELLA 6X17	1		
9	90481-M9Q-100	N/A	PLAIN WASHER 10.2MM	1		
10	94109-12000		GUARNIZIONE TAPPO DRENAGGIO OLIO M12	1		
11	94301-08140		DOWEL PIN 8X14	2		
12	95002-02080		FASCETTA TUBO B8	1		
13	95701-10012-00	N/A	VITE LIVELLO OLIO	1		
14	96001-06050-00		VITE FLANGIATA 6X50	3		
15	96001-06055-00		VITE FLANGIATA 6X55	4		

※ Please check the color & stripe information according to the color index ! **TEAMWORLD IND. 2010.03**

※N/A = SUBSTITUTE ※Y = EXCHANGEABLE ※N =NOT EXCHANGEABLE

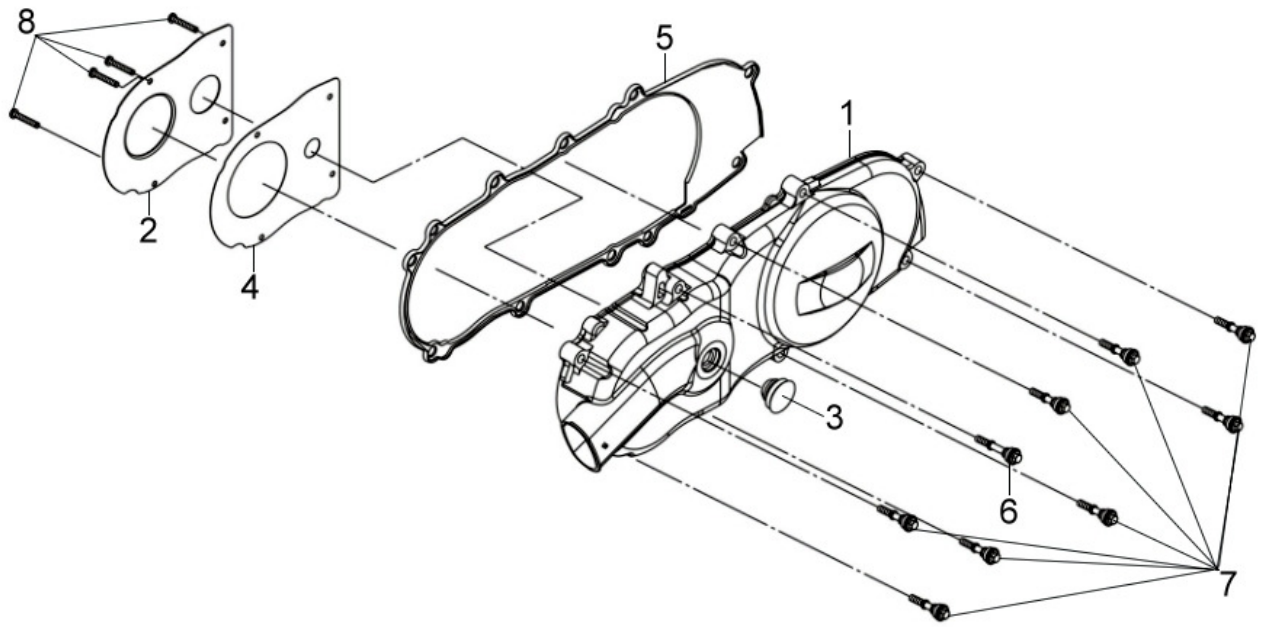

Pictures reference only

	PARTS NUMBER	DESCRIPTION	QTY	EFFECTIVE DATE	
1	11341-H9A-000-SJ	COPERCHIO FRIZIONE	1		
2	11346-H9A-000	L. COVER PLATE	1		
3	11348-LTA-000	GROMMET	1		
4	11349-H9A-000	GUARNIZIONE LAMIERINO ARIA	1		
5	11395-H9A-000	GUARNIZIONE COPERCHIO FRIZIONE	1		
6	9000A-M9Q-000	VITE SPECIALE 6X57	1		
7	9000B-M9Q-000	VITE SPECIALE 6X37	8		
8	93500-05012-0H	VITE 5X12	4		

※ Please check the color & stripe information according to the color index ! **TEAMWORLD IND. 2010.03**

※N/A = SUBSTITUTE ※Y = EXCHANGEABLE ※N =NOT EXCHANGEABLE

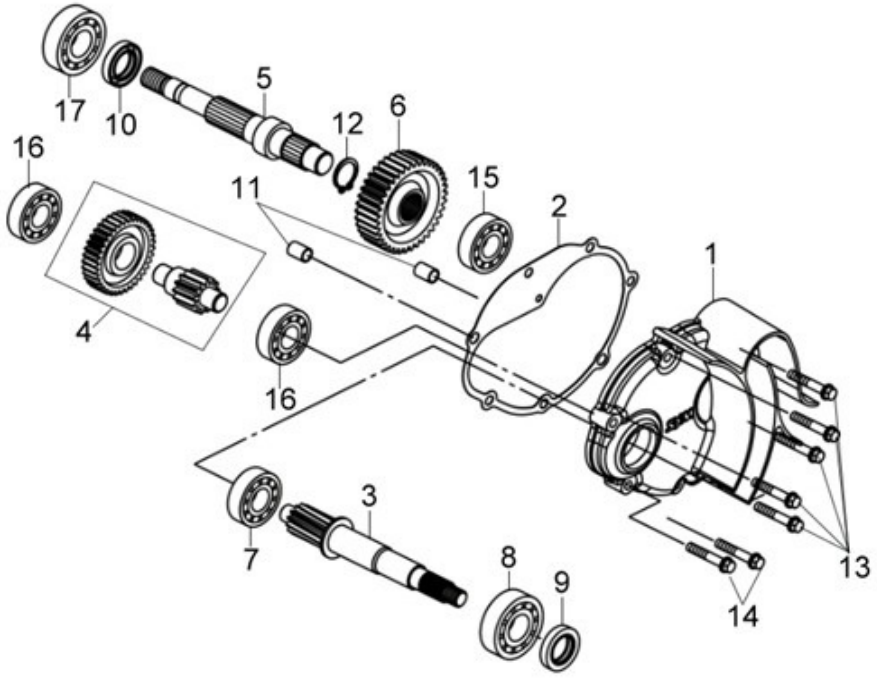

Pictures reference only

	PARTS NUMBER		DESCRIPTION	QTY	EFFECTIVE DATE	
1	21301-H9A-000		COPERCHIO INGR.TRASMISSIONE	1		
2	21395-M92-000		GUARNIZIONE COPERC. TRASM.	1		
3	23411-H9B-010		ALBERO PULEGGIA (15T)	1		
4	23420-M92-000		CONTRALBERO 43/14T	1		
5	23431-H9A-000		ALBERO USCITA RUOTA	1		
6	23432-M92-000		INGRANAGGIO	1		
7	91003-M8Q-000		RADIAL BALL BRG.CSB301JR2	1		
8	91104-KN7-670		CUSCINETTO A SFERE 6204	1		
9	91202-M9Q-300	N/A	PARAOLIO 20x32x6	1		
10	91255-M9Q-300		PARAOLIO 27x42x7	1		
11	94301-08140		DOWEL PIN 8X14	2		
12	94510-20000		ANELLO SEEGER 20MM	1		
13	96001-06030-08		FLANGE SH BOLT 6X30	5		
14	96001-06035-08		VITE FLANGIATA 6X35	2		
15	96100-62033-10		CUSCINETTO	1		
16	96100-63013-00		CUSCINETTO A SFERE 6301T C3	2		
17	96150-60043-10		CUSCINETTO A SFERE 6004LLU	1		

※ Please check the color & stripe information according to the color index ! **TEAMWORLD IND. 2010.03**

※N/A = SUBSTITUTE ※Y = EXCHANGEABLE ※N =NOT EXCHANGEABLE

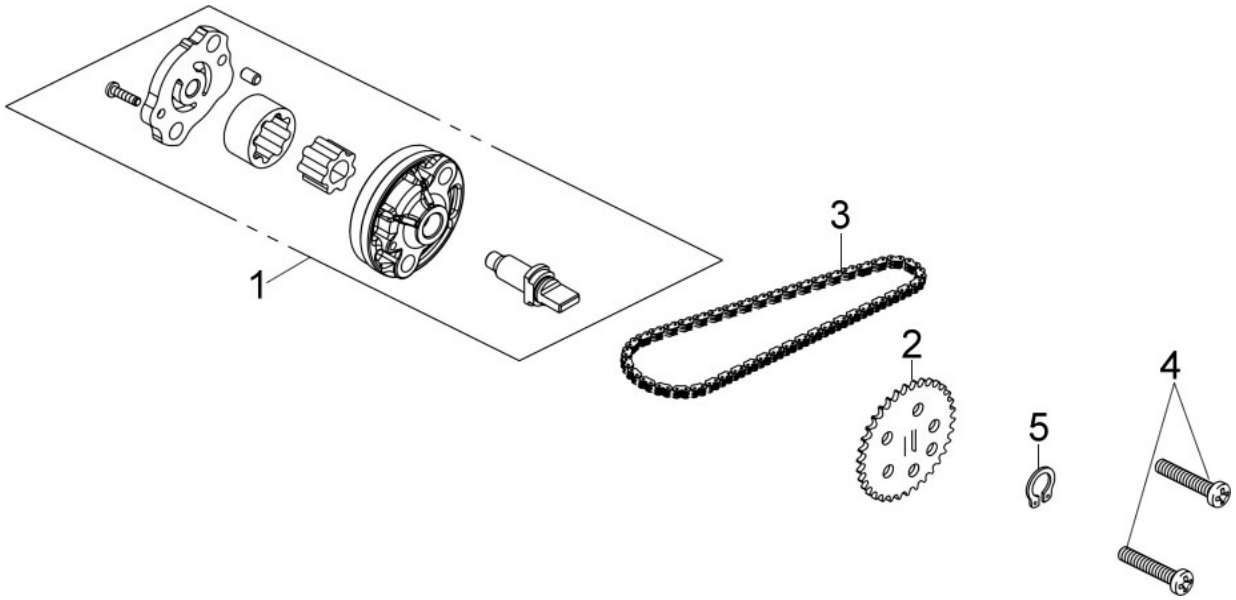

Pictures reference only

	PARTS NUMBER		DESCRIPTION	QTY	EFFECTIVE DATE	
1	15100-H9A-000		OIL PUMP ASSY	1		
2	15133-KM1-000		OIL PUMP DRIVEN SPROCKET	1		
3	1C15141-KJ9-003-E1	N/A	OIL PUMP CHAIN 25-46	1		
4	93500-06030-0H		PAN SCREW 6X30	2		
5	94510-10000		CIR CLIP 10MM	1		

※ Please check the color & stripe information according to the color index ! **TEAMWORLD IND. 2010.03**

※N/A = SUBSTITUTE ※Y = EXCHANGEABLE ※N =NOT EXCHANGEABLE