MAXSYM 400 i (LX40A1-6) MY 2011

Colori		Descrizione	Codice
	BIANCO	WH-300P	QU
	NERO	BK-231P	KX
	ANTRACITE	GY-517S	IP

INDICE COLORI MAXSYM 400 i

Pictures reference only

STRIPE			
29-1、31-1			

NO	MODEL		NERO		ANTRACITE		BIANCO		ROSSO	
	BASIC COLOR		BK		GY		W		R	
	CODE		BK-231P		GY-517S		WH-300P		R-193S	
Item	Parts Number	Description	Basic Color	Code	Basic Color	Code	Basic Color	Code	Basic Color	Code
1	42601-L4A-000	RR CAST WHEEL COMP	BK-001C	KB	BK-001C	KB	BK-001C	KB	BK-001C	KB
2	43100-L4A-000	RR. CALIPER ASSY	GD-7403S	DM	GD-7403S	DM	GD-7403S	DM	GD-7403S	DM
3	43121-L4A-000	RR BRAKE DISK	BK-001C	KB	BK-001C	KB	BK-001C	KB	BK-001C	KB
4	44601-L4A-000	FR CAST WHEEL COMP	BK-001C	KB	BK-001C	KB	BK-001C	KB	BK-001C	KB
5	45100-L4A-000	FR. CALIPER ASSY	GD-7403S	DM	GD-7403S	DM	GD-7403S	DM	GD-7403S	DM
6	45121-L4A-000	R FRONT BRAKE DISK	BK-001C	KB	BK-001C	KB	BK-001C	KB	BK-001C	KB
7	45122-L4A-000	L FRONT BRAKE DISK	BK-001C	KB	BK-001C	KB	BK-001C	KB	BK-001C	KB
8	51400-L4A-000	RH. FR. CUSHION COMP	BK-001C	KB	BK-001C	KB	BK-001C	KB	BK-001C	KB
9	51500-L4A-000	LH. FR. CUSHION COMP	BK-001C	KB	BK-001C	KB	BK-001C	KB	BK-001C	KB
10	52400-L4A-000	RR CUSHION ASSY	BK-001C	KB	BK-001C	KB	BK-001C	KB	BK-001C	KB
11	5311A-L4A-000	UPPER HANDLE COVER ASSY	BK-231P	KX	GY-517S	IP	WH-300P	QU	R-193S	XE
11-1	87553-VS1-100	FR. COVER LID EMBLEM		●		●		●		●
12	5312A-L4A-000	LOWER R HANDLE COVER ASSY	BK-001U	●	BK-001U	●	BK-001U	●	BK-001U	●
13	5312B-L4A-000	LOWER L HANDLE COVER ASSY	BK-001U	●	BK-001U	●	BK-001U	●	BK-001U	●
14	53208-L4A-000	METER PANEL	BK-001U	KA	BK-001U	KA	BK-001U	KA	BK-001U	KA
15	5320G-L4A-000	FR. UP COVER ASSY	BK-231P	KX	GY-517S	IP	WH-300P	QU	R-193S	XE
15-1	87553-L4A-000	S LOGO EMBLEM		●		●		●		●
16	61100-L4A-000	FR. FENDER	BK-231P	KX	GY-517S	IP	WH-300P	QU	R-193S	XE
17	64301-L4A-000	FR UNDER SPOLIER	BK-231P	KX	GY-517S	IP	WH-300P	QU	R-193S	XE
18	64315-L4A-000	MAINTENANCE COVER	BK-001U	KA	BK-001U	KA	BK-001U	KA	BK-001U	KA
19	6431A-L4A-000	RH. FLOOR PANEL ASSY.	BK-001U	KA	BK-001U	KA	BK-001U	KA	BK-001U	KA
20	6433A-L4A-000	LH. FLOOR PANEL ASSY.	BK-001U	●	BK-001U	●	BK-001U	●	BK-001U	●
21	67110-L4A-000	WIND SCREEN GARNISH	BK-001U	KA	BK-001U	KA	BK-001U	KA	BK-001U	KA
22	77406-L4A-000	BACK SEAT FR. COVER	BK-231P	KX	GY-517S	IP	WH-300P	QU	R-193S	XE
23	7741A-L4A-000	BACK SEAT RR. COVER ASSY	BK-231P	KX1	GY-517S	IP1	WH-300P	QU1	R-193S	XE1
24	8010A-L4A-000	RR. FENDER ASSY.	BK-001U	KA	BK-001U	KA	BK-001U	KA	BK-001U	KA
25	81141-L4A-000	INNER BOX LID	BK-231P	KX	GY-517S	IP	WH-300P	QU	R-193S	XE
26	81231-L4A-000	FR. INNER BOX	BK-001U	KA	BK-001U	KA	BK-001U	KA	BK-001U	KA
27	81310-L4A-000	RH. RR GRIP	BK-231P	KX	GY-517S	IP	WH-300P	QU	R-193S	XE
28	81320-L4A-000	LH. RR GRIP	BK-231P	KX	GY-517S	IP	WH-300P	QU	R-193S	XE
29	8350G-L4A-000	RH BODY COVER ASSY	BK-231P	KX	GY-517S	IP	WH-300P	QU	R-193S	XE
29-1	87129-HML-000	I MARK		●		●		●		●
29-2	87131-L4A-000	RH BODY COVER EMBLEM		●		●		●		●
30	8352A-L4A-000	RH SIDE COVER ASSY	BK-231P	KX	GY-517S	IP	WH-300P	QU	R-193S	XE
31	8360G-L4A-000	LH BODY COVER ASSY	BK-231P	KX	GY-517S	IP	WH-300P	QU	R-193S	XE
31-1	87129-HML-000	I MARK		●		●		●		●
31-2	87132-L4A-000	LH BODY COVER EMBLEM		●		●		●		●
32	8362A-L4A-000	LH SIDE COVER ASSY	BK-231P	KX	GY-517S	IP	WH-300P	QU	R-193S	XE
33	8365G-L4A-000	RR. COVER ASSY	BK-231P	KX	GY-517S	IP	WH-300P	QU	R-193S	XE
33-1	87553-VS1-100	FR. COVER LID EMBLEM		●		●		●		●

TELAIO - ELETTRICHE

F01
SPEEDMETER ASSY.

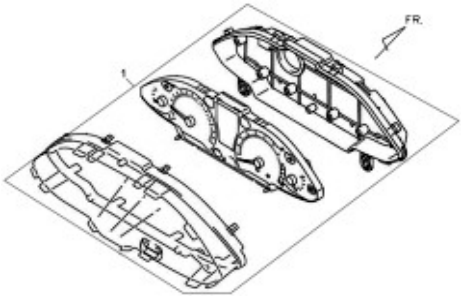

F02
HEAD LIGHT SET

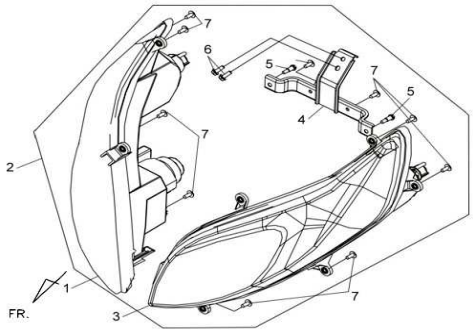

F03
BODY COVER

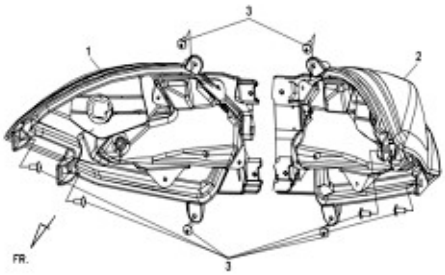

F04
WIRE HARNESS

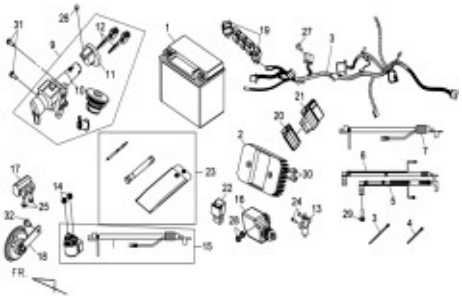

F05
FR BRAKE ASSY

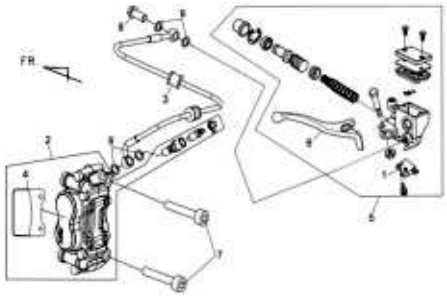

F06
RR. BRAKE ASSY

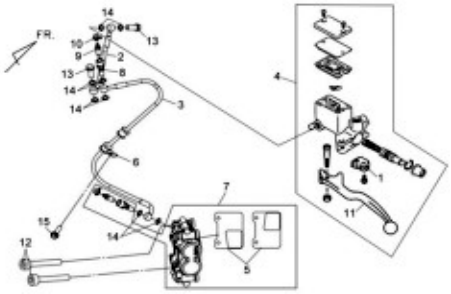

F07
DELAY VALVE ASSY

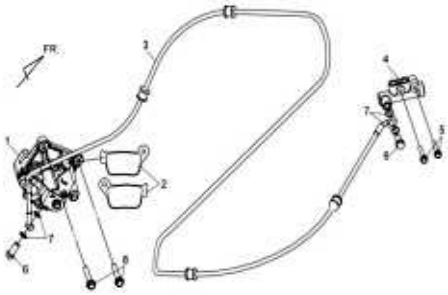

F08
FRAME BODY SET

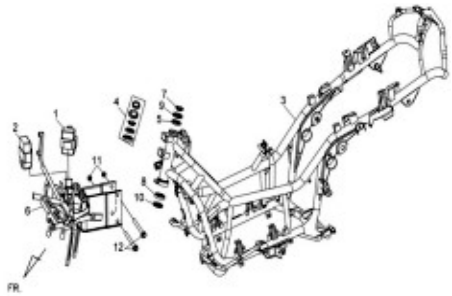

F09
ENG. HANGER LINK SET

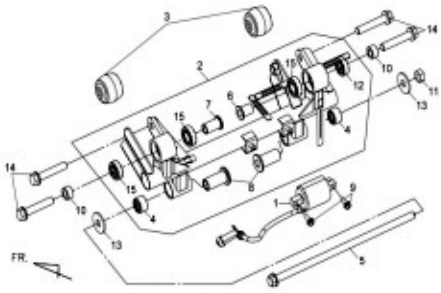

F10
SIDE STAND COMP

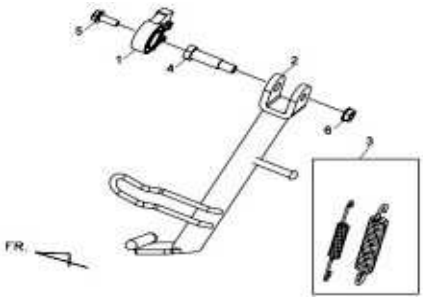

F11
FUEL TANK ASSY

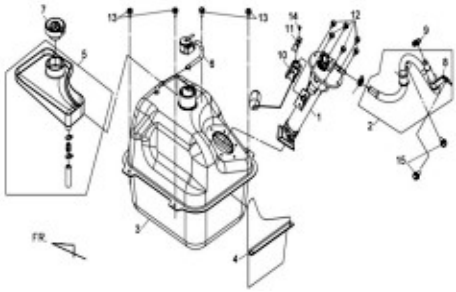

F12
BODY COVER

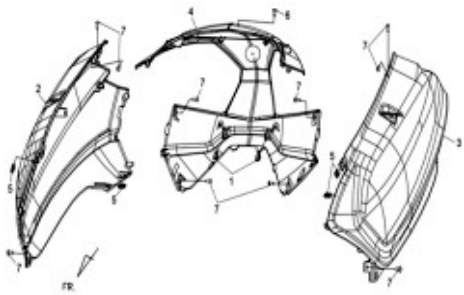

TELAIO - 2

F13
RR GRIP

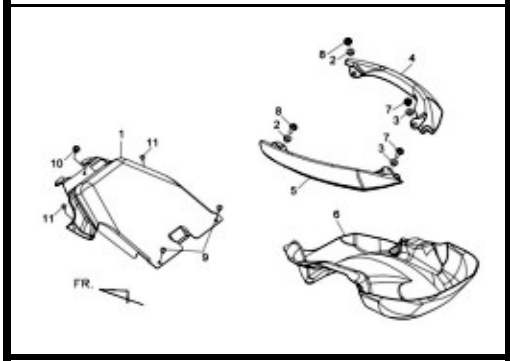

F14
FR UNDER SPOLIER ASSY

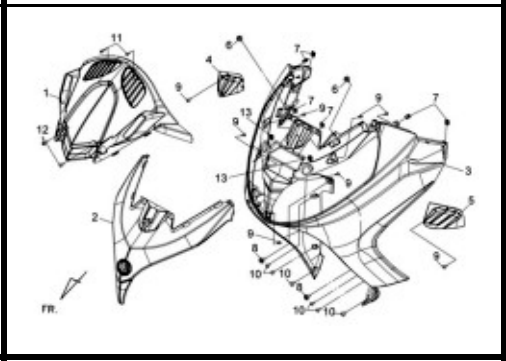

F15
UNDER COVER ASSY

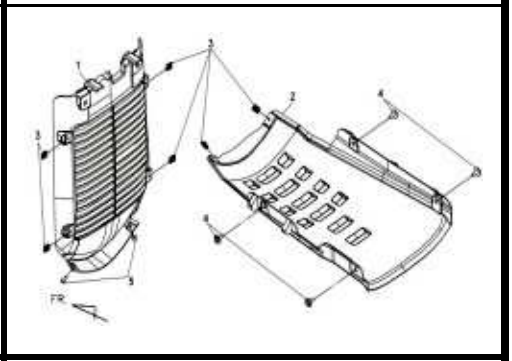

F16
SIDE COVER ASSY

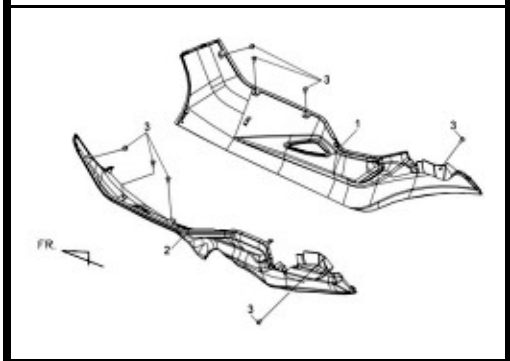

F17
FLOOR PANEL ASSY

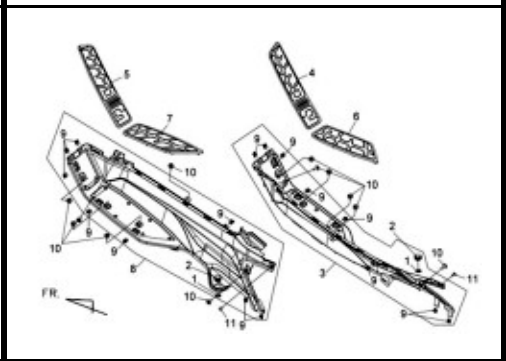

F18
WIND SCREEN ASSY

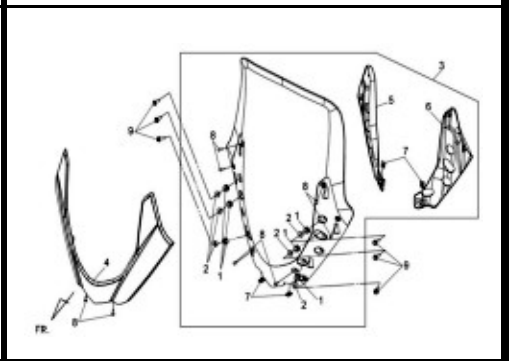

F19
UPPER HANDLE COVER ASSY

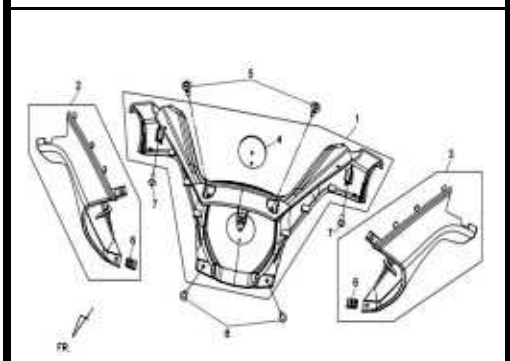

F20
FR. INNER BOX

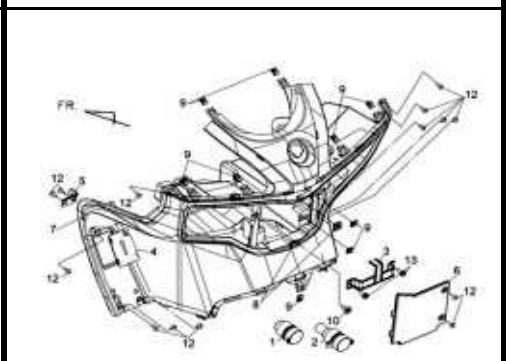

F21
INNER BOX LID

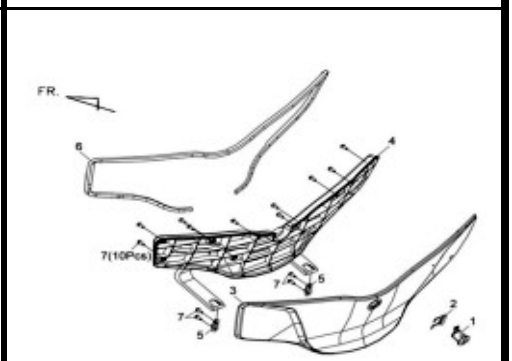

F22
METER PANEL

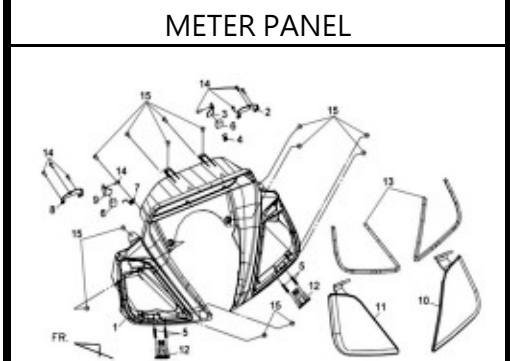

F23
FR. FENDER

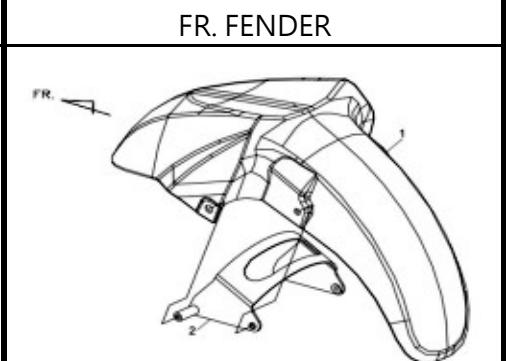

F24
HANDLE ASSY

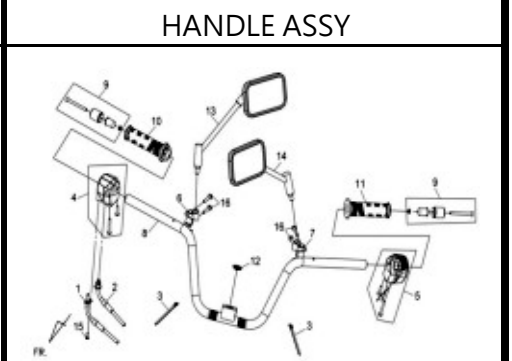

TELAIO - 3

F25
PARKING LEVER ASSY

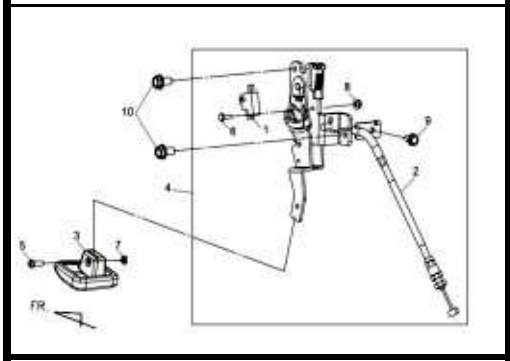

F26
DOUBLE SEAT ASSY

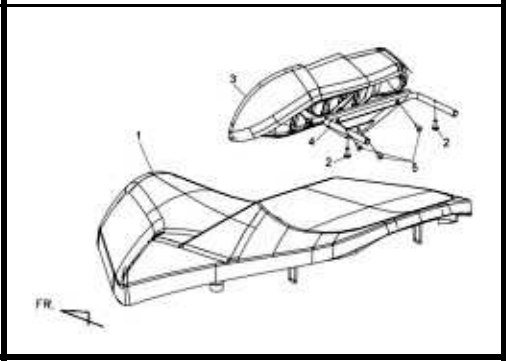

F27
BACK SEAT ASSY

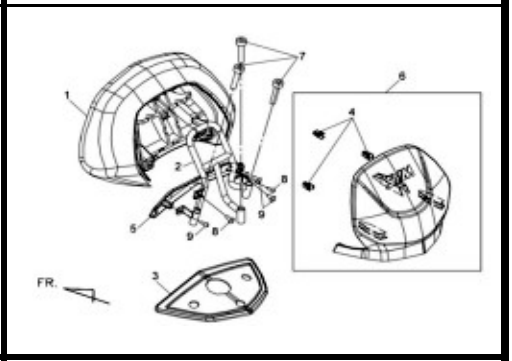

F28
LUGGAGE BOX

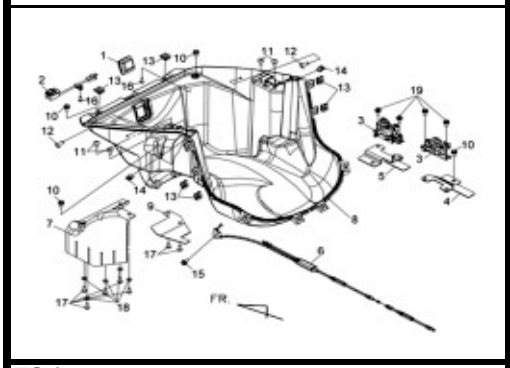

F29
RR. LUGGAGE BOX

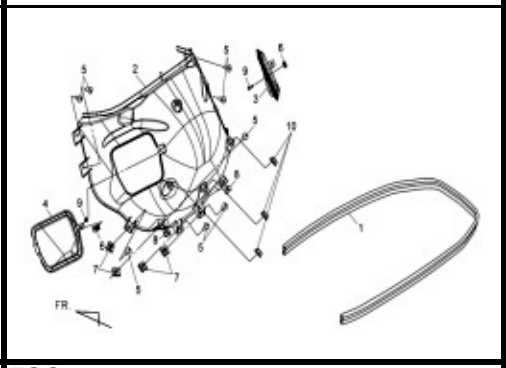

F30
OPEN STAY

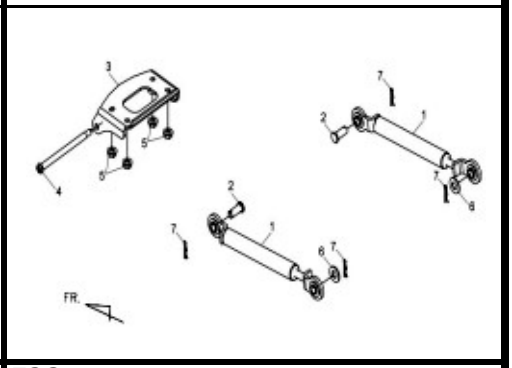

F31
MAINTENANCE COVER ASSY

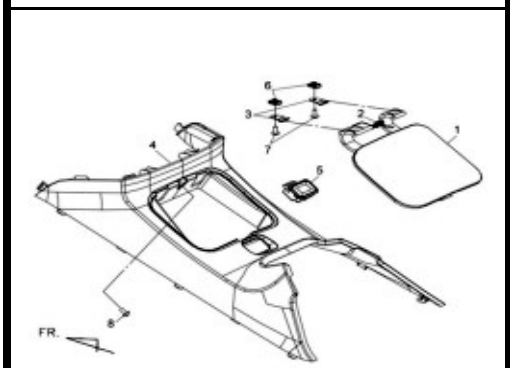

F32
RR. FENDER ASSY

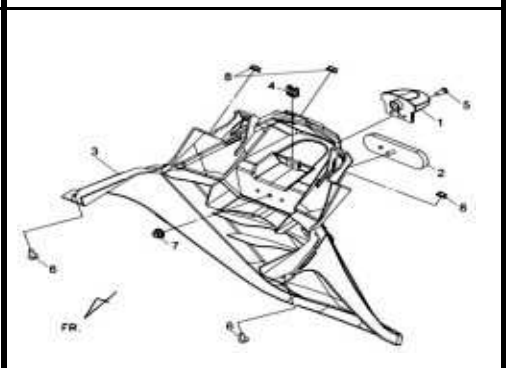

F33
RADIATOR ASSY

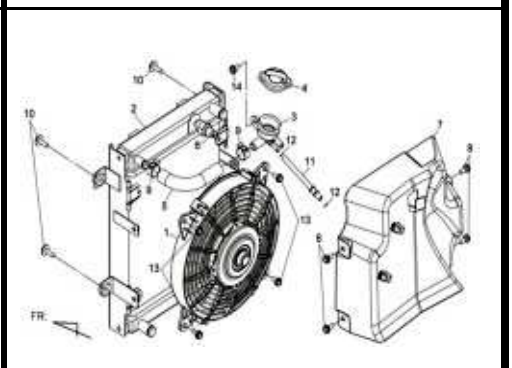

F34
RESERVE TANK ASSY.

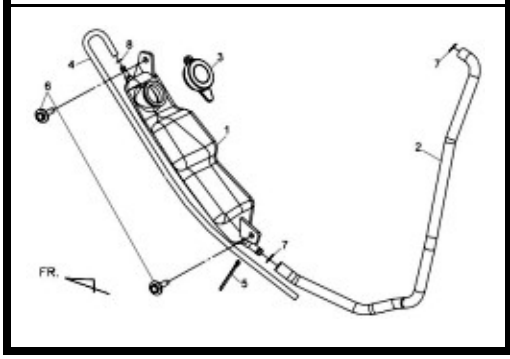

F35
WATER HOSE ASSY

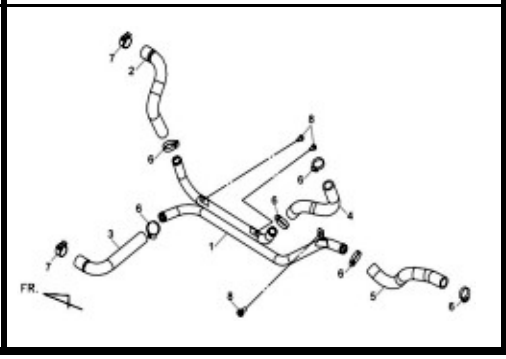

F36
PILLION STEP ASSY

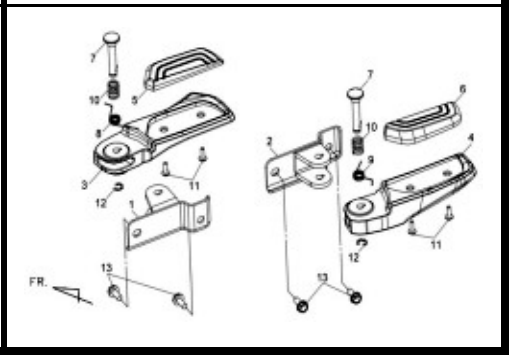

TELAIO - 4

F37
STRG. STEM COMP.

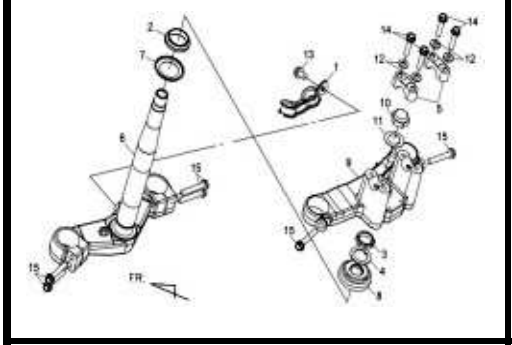

F38
FR.CUSHION COMP

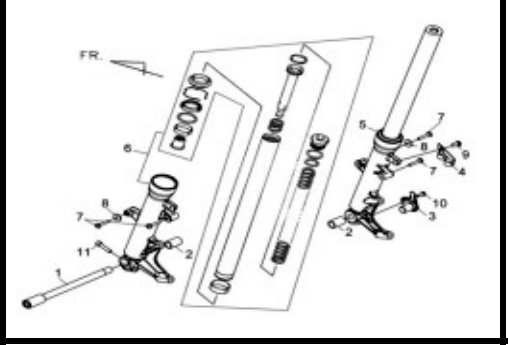

F39
FR. WHEEL ASSY

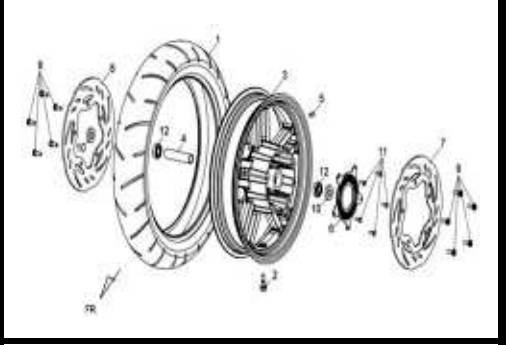

F40
RR. FORK ASSY.

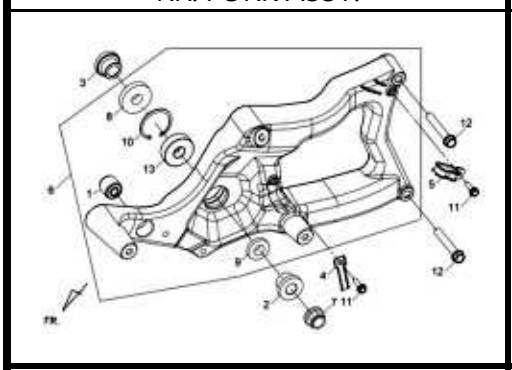

F41
RR CUSHION ASSY

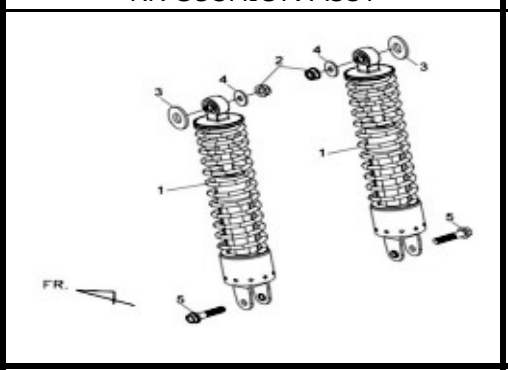

F42
MAIN STAND ASSY.

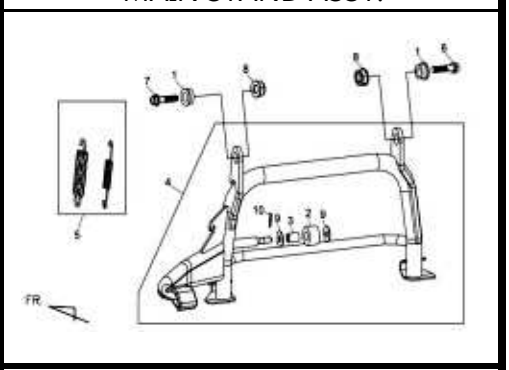

F43
RR. WHEEL ASSY

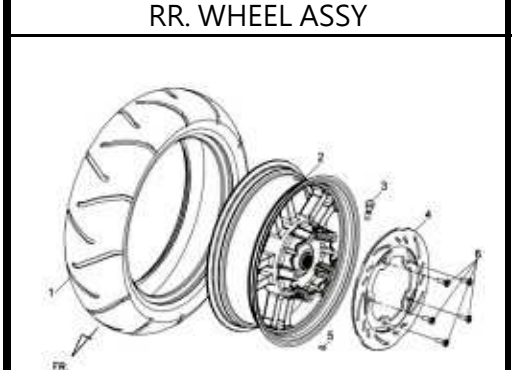

F44
AIR/C ASSY.

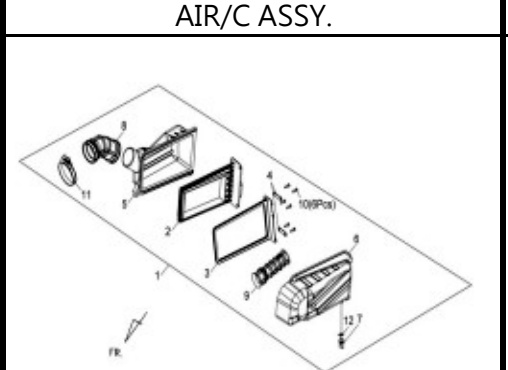

F45
AIR/C BOX ASSY.

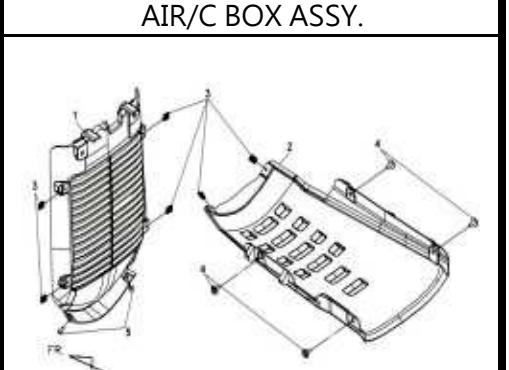

F46
EXH. MUFFLER ASSY.

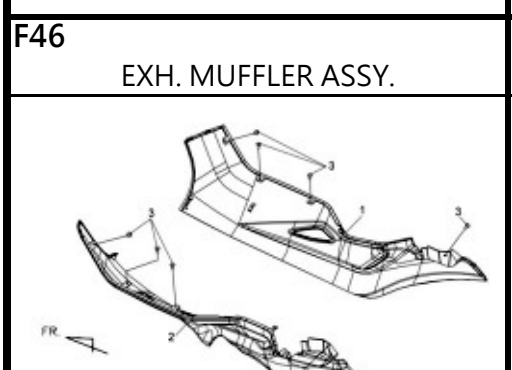

F47
TRUNK BOX BRKT. ASSY [OPTIONAL]

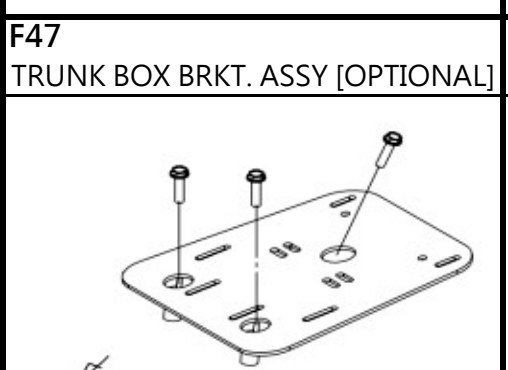

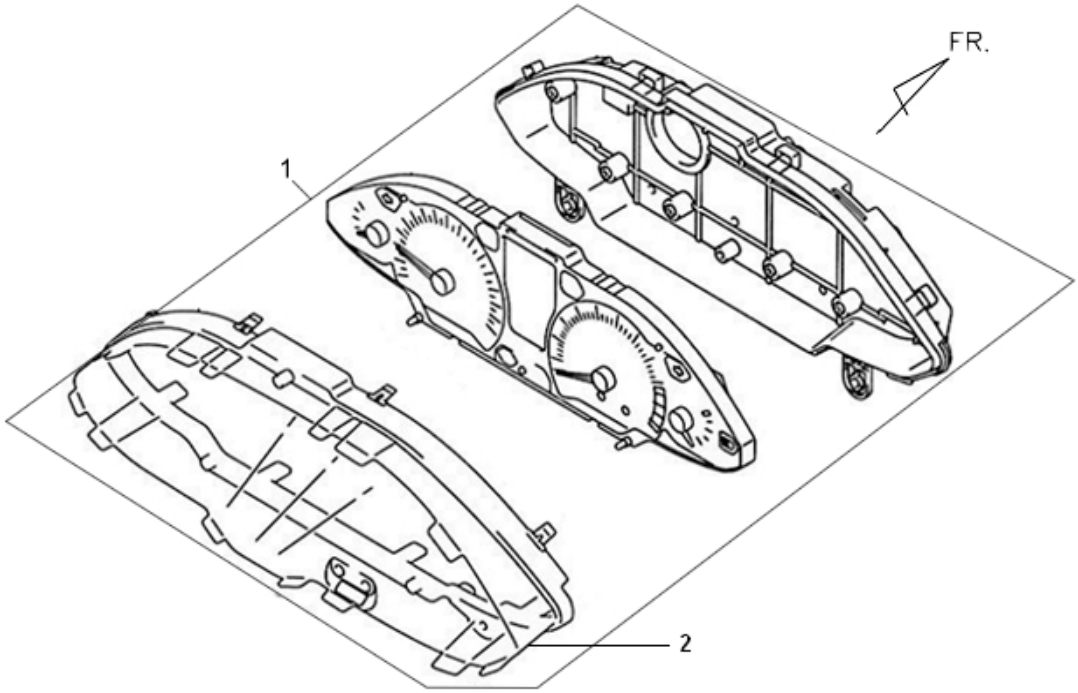

Pictures reference only

	PARTS NUMBER	DESCRIPTION	QTY	EFFECTIVE DATE	
1	37200-L4A-000	CRUSCOTTO STRUMENTI COMPLETO	1		
2	37119-L4A-000	VETRO CRUSCOTTO	1		

※ Please check the color & stripe information according to the color index !

※N/A = SUBSTITUTE ※Y = EXCHANGEABLE ※N =NOT EXCHANGEABLE

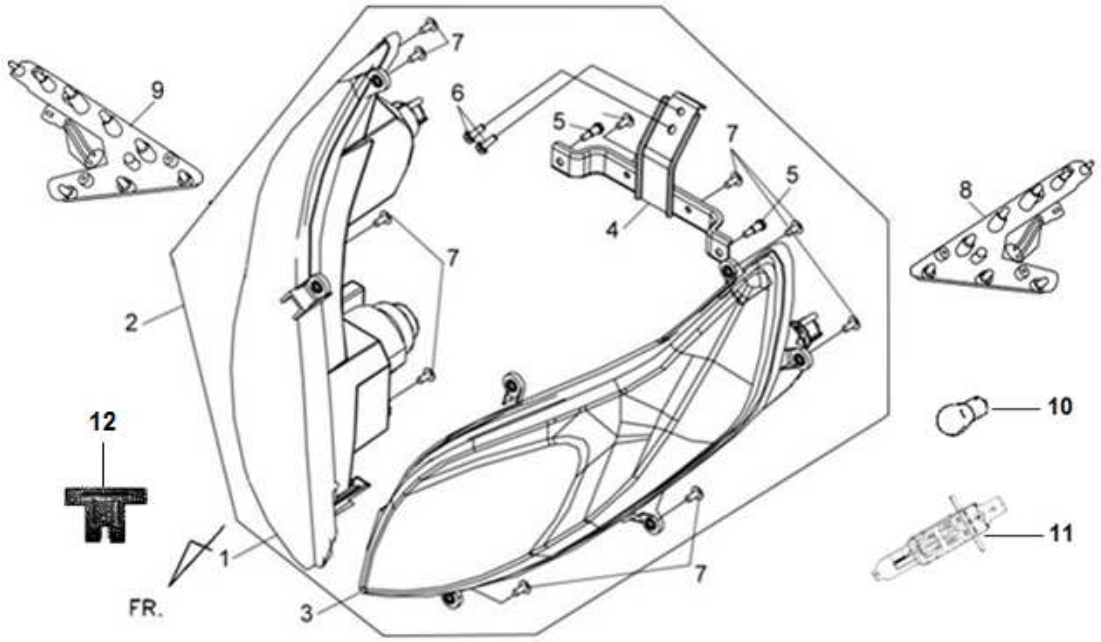

Pictures reference only

	PARTS NUMBER	DESCRIPTION	QTY	EFFECTIVE DATE	
1	33100-L4A-000	FANALE ANTERIORE DX	1		
2	3310A-L4A-000	FANALE ANTERIORE COMPLETO	1		
3	33150-L4A-000	FANALE ANTERIORE SX	1		
4	50310-L4A-000	TELAIETTO	1		
5	90111-N24-000	VITE FLANGIATA 6MM	2		
6	93903-24380	VITE AUTOFILETTANTE 4X12	4		
7	93903-35280	VITE AUTOFILETTANTE 5X12	10		
8	33415-L4A-000	KIT LED POSIZIONE FARO DX ANT.	1		
9	33455-L4A-000	KIT LED POSIZIONE FARO SX ANT.	1		
10	34905-T6R-000	LAMPADINA LAMPEG.12V-10W(E)	2		
11	34901-HMC-000	LAMPADINA 12V-55W (H1)	2		
12	33124-HWA-000	PIASTRINA FARI ANTERIORI	1		

※ Please check the color & stripe information according to the color index !

※N/A = SUBSTITUTE ※Y = EXCHANGEABLE ※N =NOT EXCHANGEABLE

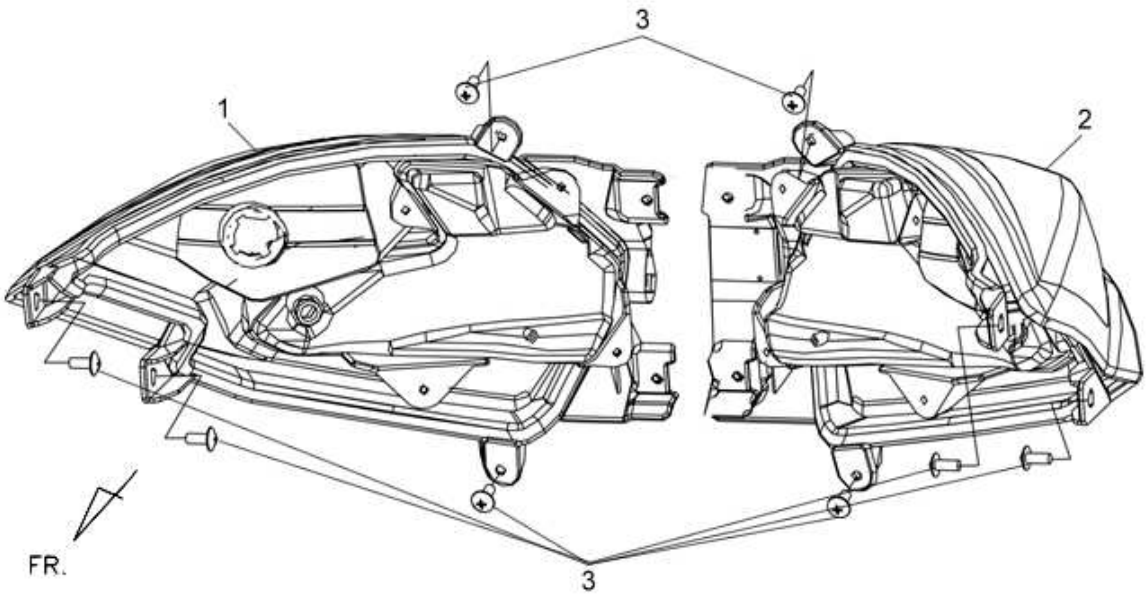

Pictures reference only

	PARTS NUMBER	DESCRIPTION	QTY	EFFECTIVE DATE	
1	33700-L4A-000	FANALE POSTERIORE DX	1		
1-1	33705-L4A-000	LENTE FARO POST.DX	1		
1-2	33706-L4A-000	KIT LED POSIZIONE DX FARO POST.	1		
1-3	34905-A8D-000	LAMPADINA LAMPEG. 12V-10W	1		
2	33750-L4A-000	FANALE POSTERIORE SX	1		
2-1	33755-L4A-000	LENTE FARO POST.SX	1		
2-2	33756-L4A-000	KIT LED POSIZIONE SX FARO POST.	1		
2-3	34905-A8D-000	LAMPADINA LAMPEG. 12V-10W	1		
3	93903-35280	VITE AUTOFILETTANTE 5X12	8		

※ Please check the color & stripe information according to the color index !

※N/A = SUBSTITUTE ※Y = EXCHANGEABLE ※N =NOT EXCHANGEABLE

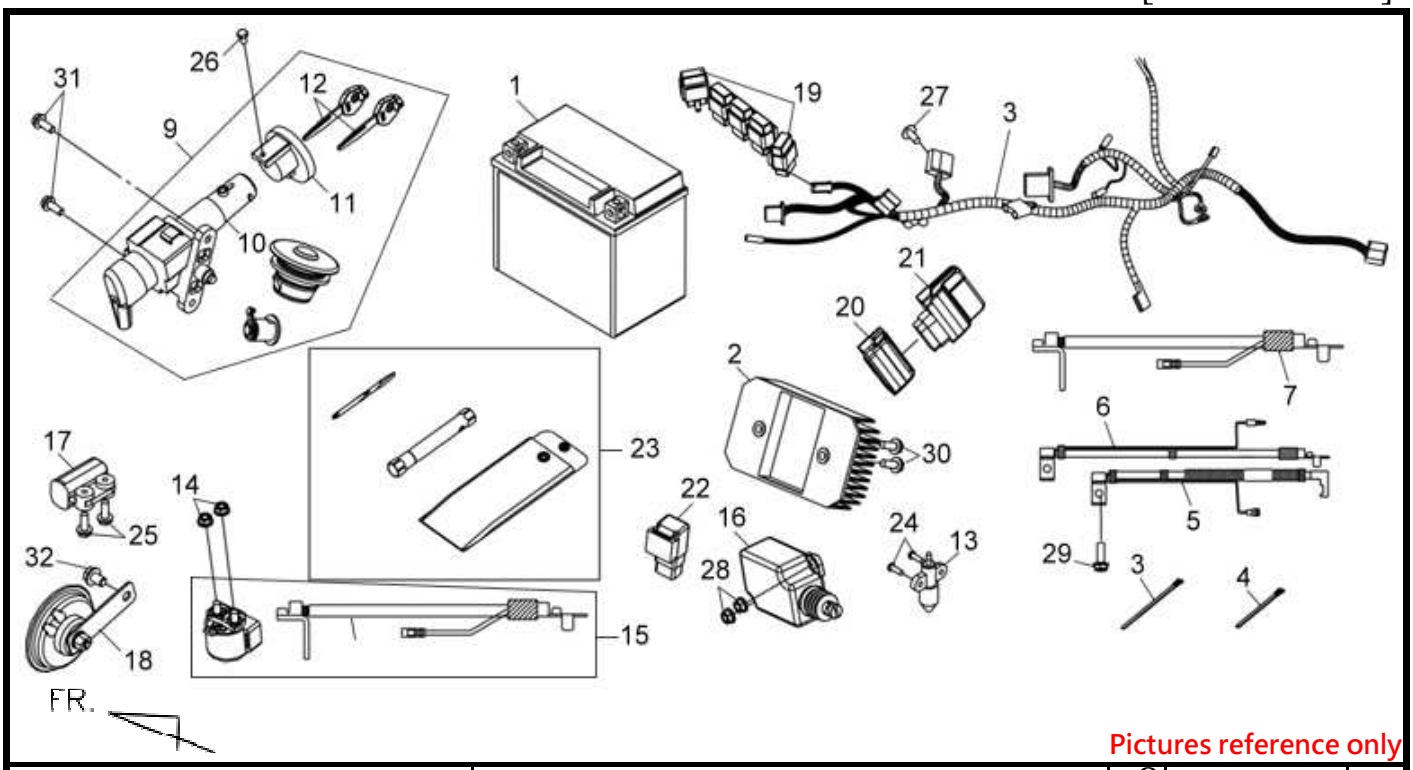

Pictures reference only

	PARTS NUMBER	DESCRIPTION	QTY	EFFECTIVE DATE	
1	1Y01L4A01-Y	BATTERIA	1		
2	31600-L4A-000	REGOLATORE DI TENSIONE	1		
3	32100-L4A-000	IMPIANTO ELETTRICO	1		
4	32160-A3A-900	WIRE BAND 200X8	9		
5	32161-H6T-000	WIRE BAND 100X8	2		
6	32411-L4A-000	CAVO BATTERIA	1		
7	32412-L4A-000	CAVO MASSA BATTERIA A	1		
8	32415-L4A-000	CAVO MASSA BATTERIA B	1		
9	35010-L4A-000	GRUPPO SERRATURE	1		
10	35100-L4A-000	BLOCCO AVVIAMENTO	1		
11	35110-L4A-000	GHIERA ACCENSIONE	1		
12	35111-L4A-000-A	CHIAVE GREZZA A	1		
12	35111-L4A-000-B	CHIAVE GREZZA B	1		
13	35380-L4A-000	INTERRUTTORE LUCE SELLA	1		
14	35859-M9Q-000	STAR MAG. SW NUT	2		
15	3585A-L4A-000	TELERUTTORE AVVIAMENTO	1		
16	35880-HMB-000	SOLENOIDE APERTURA SELLA	1		
17	36100-MMA-100	ROLL OVER SENSOR ASSY	1		
18	38110-L4A-000	CLAXON	1		
19	3850A-HLA-010	RELE'	5		
20	38700-L4A-000	GOMMINO E.C.U.	1		
21	38710-L4A-000	CENTRALINA E.C.U.	1		
22	38800-H5B-000	ELECTRIC RELAY UNIT	1		
23	89010-M92-000	SERIE UTENSILI	1		
24	93500-04012-0H	VITE 4X12	2		

25	93891-04022-08	SCREW WASHER 4X22	2		

F04 WIRE HARNESS

LX40A1-6[MAXSYM 400]

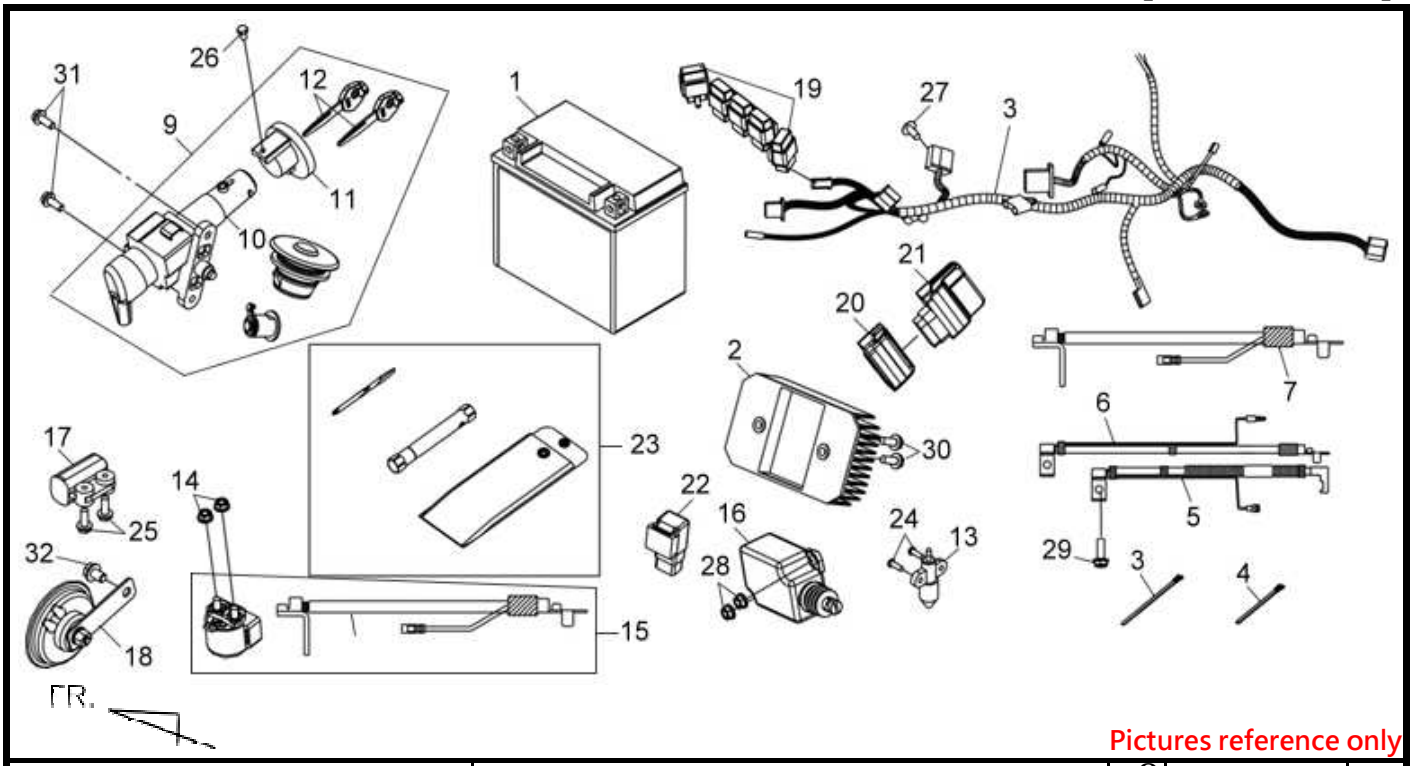

Pictures reference only

	PARTS NUMBER	DESCRIPTION	QTY	EFFECTIVE DATE	
26	93891-05008-08	WASHER SCREW 5*8	1		
27	93903-24380	VITE AUTOFILETTANTE 4X12	1		
28	94050-06070	DADO FLANGIATO 6MM	2		
29	95801-06012-08	VITE FLANGIATA	1		
30	95801-06016-08	VITE FLANGIATA 6X16	2		
31	95801-06018-07	VITE FLANGIATA	2		
32	95801-08012-07	VITE FLANGIATA 8X12	1		

※ Please check the color & stripe information according to the color index !

※N/A = SUBSTITUTE ※Y = EXCHANGEABLE ※N =NOT EXCHANGEABLE

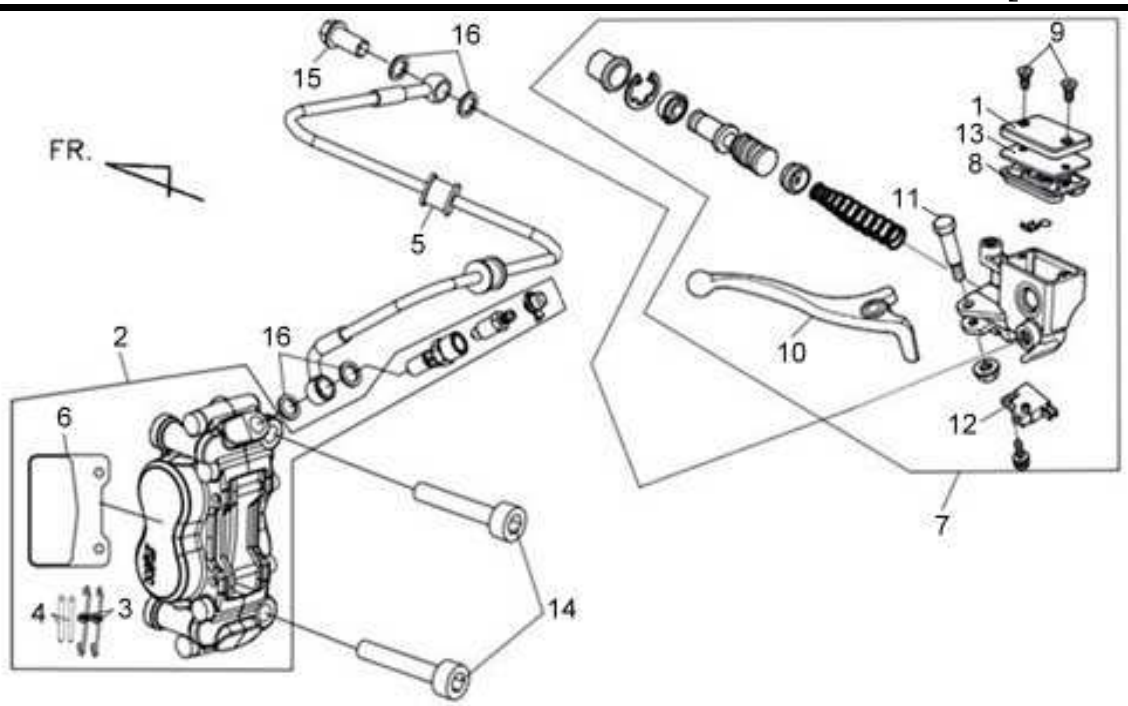

Pictures reference only

	PARTS NUMBER	DESCRIPTION	QTY	EFFECTIVE DATE	
1	43507-L4A-300	COPERCHIO POMPA FRENO	1		
2	45100-L4A-000-DM	PINZA FRENO ANTERIORE DX	1		
3	45108-L4A-300	MOLLETTA PASTIGLIA FRENO	2		
4	45113-L4A-300	SPINOTTO	2		
5	45126-L4A-000	TUBO OLIO FRENO ANTERIORE	1		
6	45130-L4A-300	COPPIA PAST.FRENO ANT.SX	1		
7	45500-L4A-000	POMPA FRENO ANTERIORE DX	1		
8	45506-L4A-300	MEMBRANA POMPA FRENO	1		
9	45508-L4A-300	MASTER CYCLINDER CAP SCREW	2		
10	45509-L4A-300	LEVA FRENO ANT.DX COMPLETA	1		
11	45510-L4A-300	HANDLE LEVER SCREW	1		
12	45514-L4A-300	INTERRUTTORE STOP DX	1		
13	45517-L4A-300	DIAPHRAGM PLATE.	1		
14	90102-L4A-000	BULLONE 10X22	2		
15	90145-M9Q-000	VITE 10X22 RACCORDO TUBO OLIO	1		
16	90545-M9Q-000	RONDELLA TUBO OLIO	4		

※ Please check the color & stripe information according to the color index !

※N/A = SUBSTITUTE ※Y = EXCHANGEABLE ※N =NOT EXCHANGEABLE

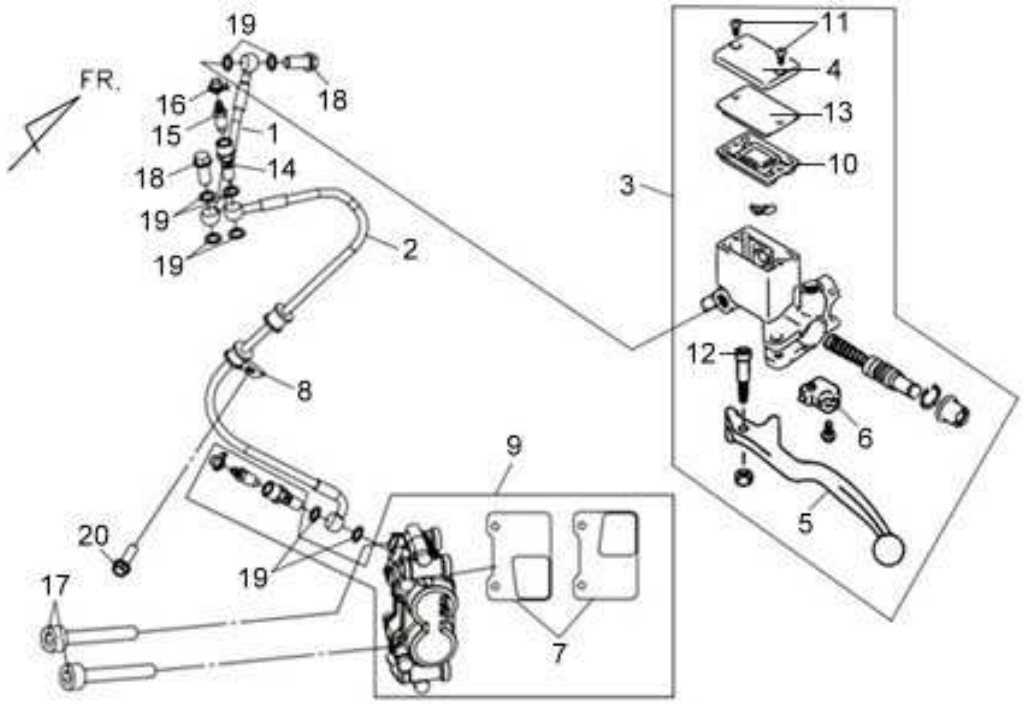

Pictures reference only

	PARTS NUMBER	DESCRIPTION	QTY	EFFECTIVE DATE	
1	43126-L4A-000	TUBO OLIO FRENO POSTERIORE	1		
2	43312-L4A-000	TUBO OLIO FRENO ANTERIORE SX	1		
3	43500-L4A-000	POMPA FRENO ANTERIORE SX	1		
4	43507-L4A-300	COPERCHIO POMPA FRENO	1		
5	43509-L4A-300	LEVA FRENO ANT.SX COMPLETA	1		
6	43514-L4A-300	INTERRUTTORE STOP SX	1		
7	45135-L4A-300	COPPIA PAST.FRENO ANT.SX	1		
8	45157-L4A-000	FR.BRAKE HOSE CLAMP	1		
9	45200-L4A-000-DM	PINZA FRENO ANTERIORE SX	1		
10	45506-L4A-300	MEMBRANA POMPA FRENO	1		
11	45508-L4A-300	MASTER CYCLINDER CAP SCREW	2		
12	45510-L4A-300	HANDLE LEVER SCREW	1		
13	45517-L4A-300	DIAPHRAGM PLATE.	1		
14	46301-HMA-000	VITE T	1		
15	46302-HMA-000	VITE SPURGO	1		
16	46303-HMA-000	TAPPO VITE SPURGO	1		
17	90102-L4A-000	BULLONE 10X22	2		
18	90145-M9Q-000	VITE 10X22 RACCORDO TUBO OLIO	2		
19	90545-M9Q-000	RONDELLA TUBO OLIO	8		
20	95801-06012-08	FLANGE BOLT	1		

※N/A = SUBSTITUTE ※Y = EXCHANGEABLE ※N =NOT EXCHANGEABLE

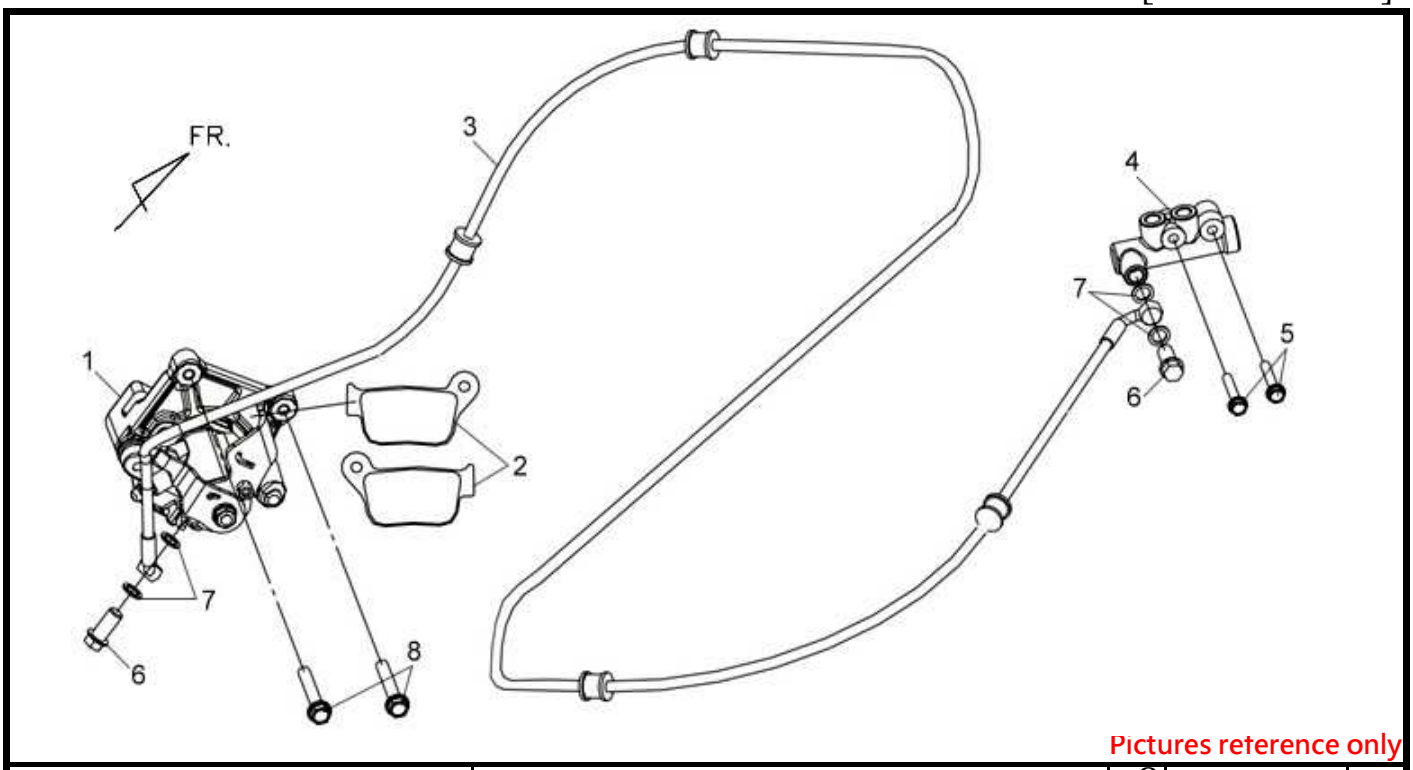

Pictures reference only

	PARTS NUMBER	DESCRIPTION	QTY	EFFECTIVE DATE	
1	43100-L4A-000-DM	PINZA FRENO POSTERIORE	1		
2	43140-L4A-300	COPPIA PAST.FRENO POST.	1		
3	43313-L4A-000	TUBO OLIO FRENO POSTERIORE	1		
4	46300-HMA-000	DELAY VALVE ASSY	1		
5	90104-LEA-000	VITE FLANGIATA 8X50	2		
6	90145-M9Q-000	VITE 10X22 RACCORDO TUBO OLIO	2		
7	90545-M9Q-000	RONDELLA TUBO OLIO	4		
8	95801-06035-07	VITE FLANGIATA 6X35	2		

※ Please check the color & stripe information according to the color index !

※N/A = SUBSTITUTE ※Y = EXCHANGEABLE ※N =NOT EXCHANGEABLE

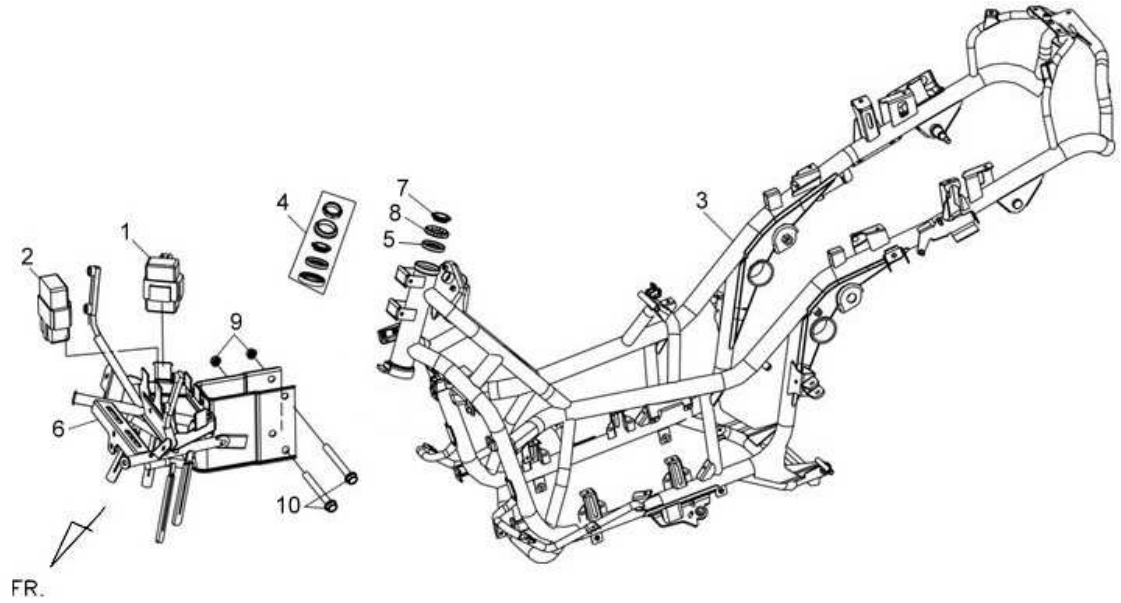

Pictures reference only

	PARTS NUMBER	DESCRIPTION	QTY	EFFECTIVE DATE	
1	3043A-REA-000	BATTERY OPEN CONTROL ASSY	1		
2	3872A-L4A-000	HAZARD CONTROL UNIT ASSY	1		
3	5010N-L4A-001	FRAME BODY SET BK-001C	1		
4	50300-L4A-000	BALL RACE SET	1		
5	50301-HMA-000	RACE UP STRG BALL	1		
6	50315-L4A-000	FR.COVER STAY	1		
7	53211-HMA-000	STRG. UP CONE RACE	1		
8	53215-HMA-000	STEEL BALL UP ASSY.	1		
9	94050-08080	DADO FLANGIATO 8MM	2		
10	95801-08065-08	VITE FLANGIATA 8X65	2		

※ Please check the color & stripe information according to the color index !

※N/A = SUBSTITUTE ※Y = EXCHANGEABLE ※N =NOT EXCHANGEABLE

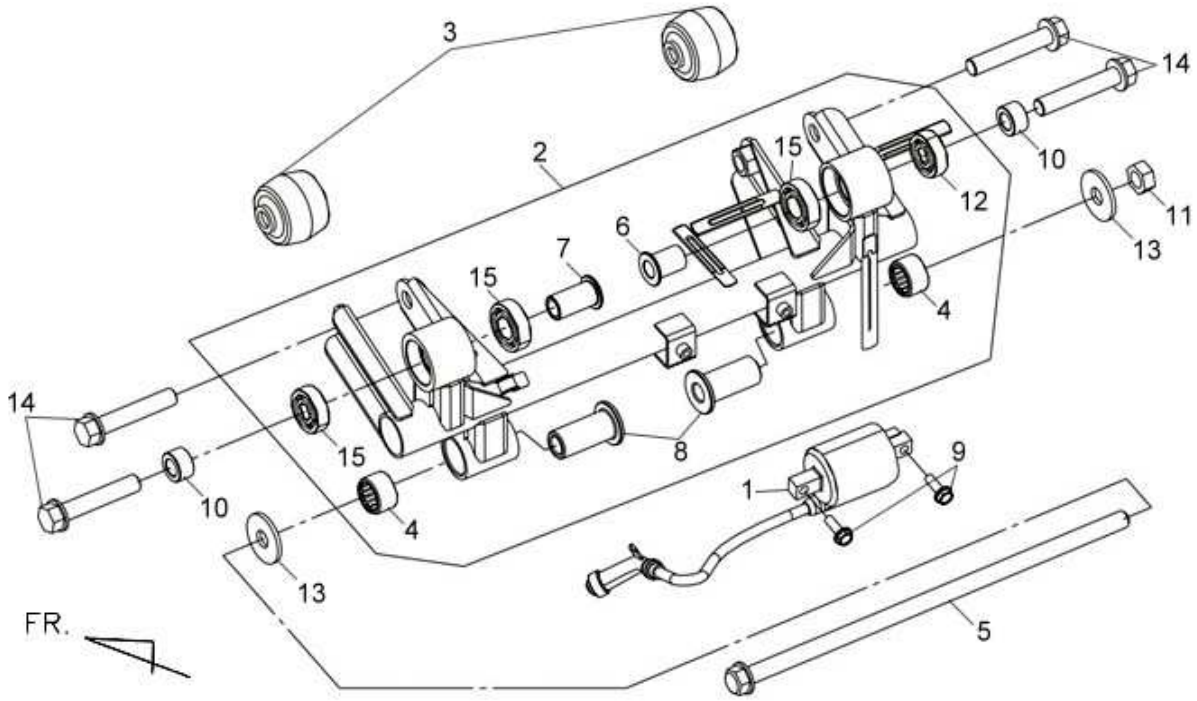

Pictures reference only

	PARTS NUMBER	DESCRIPTION	QTY	EFFECTIVE DATE	
1	3051A-L4A-000	BOBINA ACCENSIONE+PIPETTA	1		
2	50350-L4A-000	SUPPORTO MOTORE COMPL.	1		
3	50356-L4A-000	STOPPER RUBBER BUSH	2		
4	50367-L4A-000	NEEDLE ROLLER BRG.	2		
5	90105-L4A-000	ENG HANGER AXLE	1		
6	90107-L4A-000	HANGER COLLAR	1		
7	90108-L4A-000	FR.HANGER COLLAR	1		
8	90109-L4A-000	HANGER UNDER COLLAR	2		
9	90112-M9Q-000	VITE FLANGIATA 6MM	2		
10	90121-L4A-000	DISTANZIALE	2		
11	90306-M9Q-000	DADO 12MM	1		
12	90912-M9Q-000-M1	CUSCINETTO A SFERE 6201TU/2A	1		
13	94103-12800	RONDELLA PIANA	2		
14	95801-12065-07	VITE FLANGIATA 12X65	4		
15	96150-60033-10	CUSCINETTO A SFERE 6003UU	3		

※ Please check the color & stripe information according to the color index !

※N/A = SUBSTITUTE ※Y = EXCHANGEABLE ※N =NOT EXCHANGEABLE

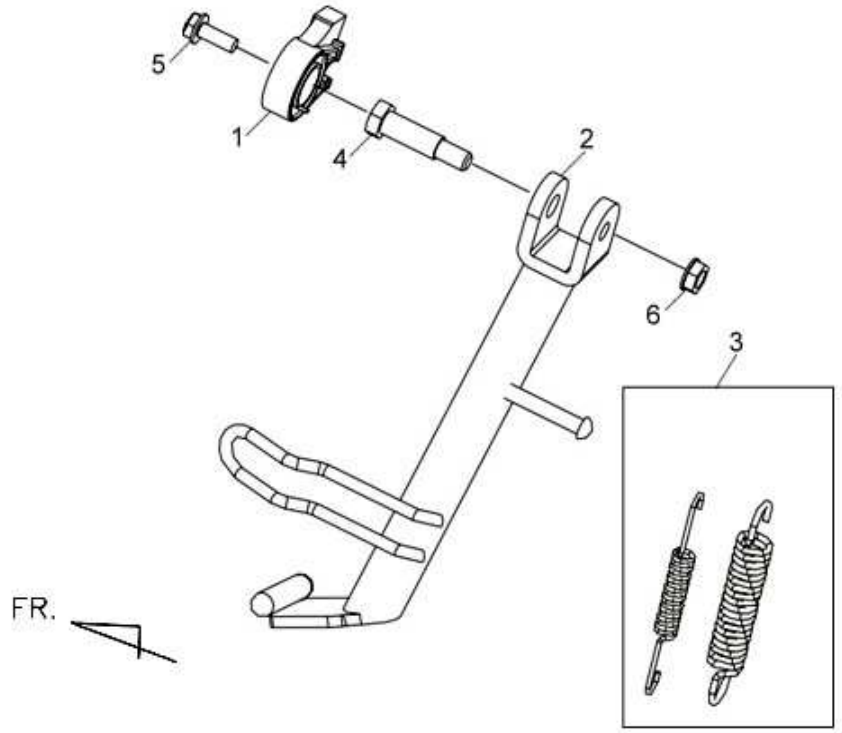

Pictures reference only

	PARTS NUMBER	DESCRIPTION	QTY	EFFECTIVE DATE	
1	36500-HMA-000	INTERRUTTORE CAVALLETTO LATERALE	1		
2	50530-L4A-000	CAVALLETTO LATERALE	1		
3	5053A-HMA-000	MOLLA CAVALLETTO LATERALE	1		
4	90108-HMA-000	VITE CAVALLETTO LATERALE	1		
5	93404-06016-07	BOLT WASHER 6X16	1		
6	94030-08080	DADO 8MM	1		

※ Please check the color & stripe information according to the color index !

※N/A = SUBSTITUTE ※Y = EXCHANGEABLE ※N =NOT EXCHANGEABLE

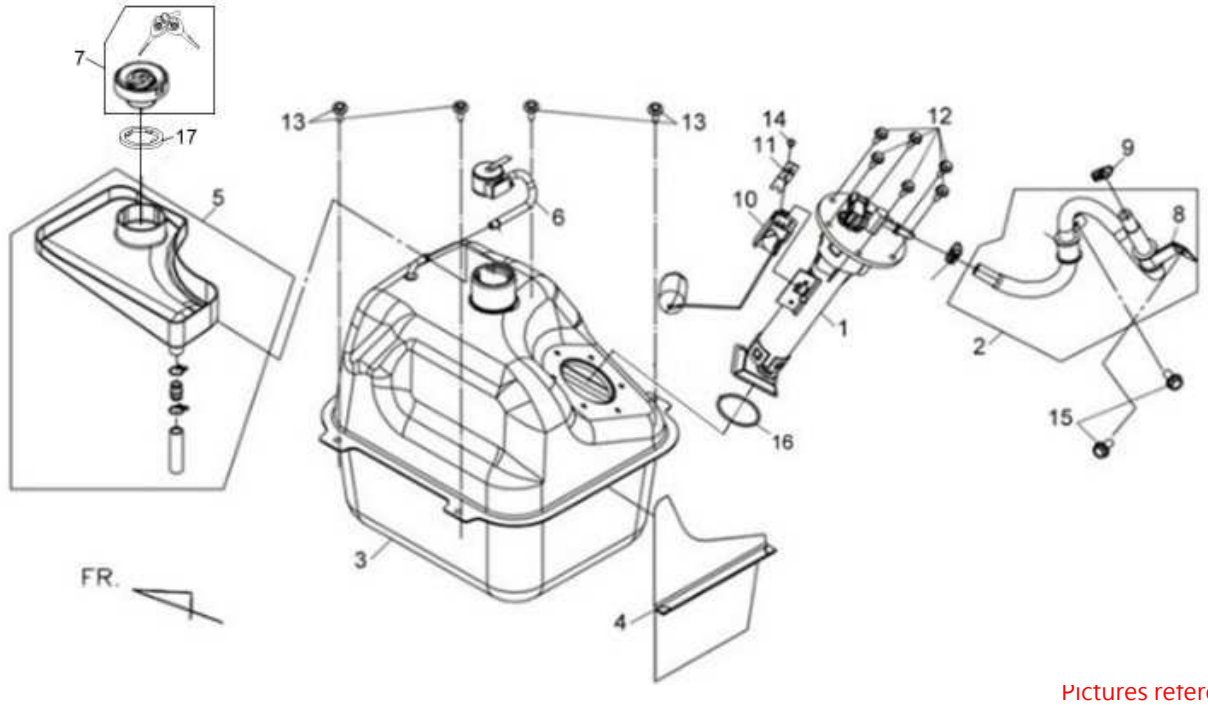

Pictures reference only

	PARTS NUMBER	DESCRIPTION	QTY	EFFECTIVE DATE	
1	1670A-L4A-000	POMPA CARBURANTE	1		
2	16730-L4A-000	TUBO CARBURANTE	1		
3	17500-L4A-000	SERBATOIO CARBURANTE	1		
4	17506-L4A-000	PANNELLO CALORE	1		
5	17510-L4A-000	FUEL TANK CAP RUBBER ASSYBK-001U	1		
6	17580-L4A-000	VALVOLA SFIATO SERBATOIO	1		
7	17620-L4A-000	TAPPO SERBATOIO CARBURANTE	1		
8	17788-L4A-000	FUEL TUBE CLAMP B	2		
9	19505-H5D-900	HOSE CLAMP	2		
9	19505-H5D-000	HOSE CLAMP	2	2011/11/25	
10	37800-L4A-000	SONDA LIVELLO CARBURANTE	1		
11	37804-LEA-000	FUEL UNIT STAY	1		
12	90106-LEA-000	FUEL PUMP BOLT	6		
13	93404-06012-08	VITE FLANGIATA 6X12	4		
14	93903-HGC-000	VITE AUTOFILETTANTE	1		
15	95801-06012-08	VITE FLANGIATA 6X12	2		
16	37801-A5L-000	FUEL FILTER PACKING	1		
17	17518-L4A-000	FUEL TANK CAP COVER	1		

※ Please check the color & stripe information according to the color index !

※N/A = SUBSTITUTE ※Y = EXCHANGEABLE ※N =NOT EXCHANGEABLE

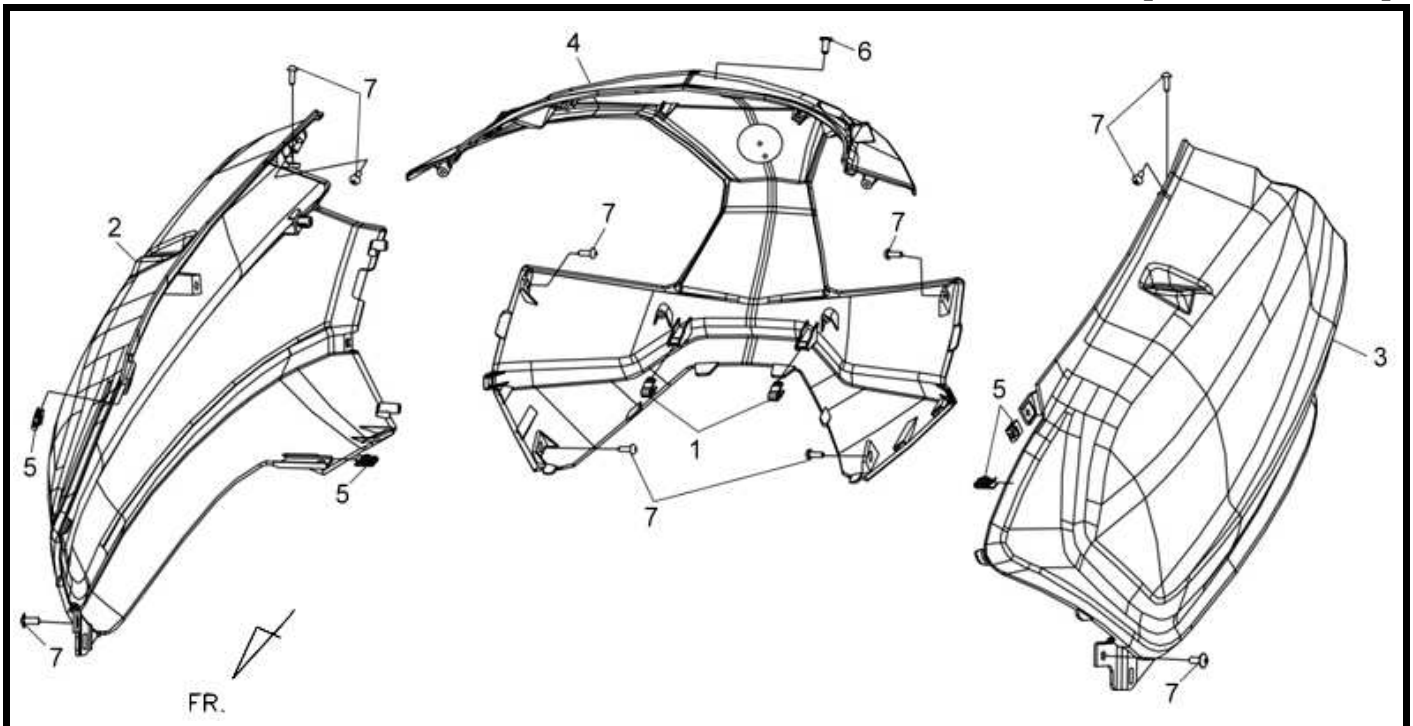

Pictures reference only

	PARTS NUMBER	DESCRIPTION	QTY	EFFECTIVE DATE	
1	77405-L4A-000	CLIP	2		
2	8350G-L4A-000-IP	FIANCHETTO DX ANTRACITE GY-517S	1		
2-1	87129-HML-000	ADESIVO "Iniezione"	1		
2-2	87131-L4A-000	EMBLEMA DX	1		
2	8350G-L4A-000-KX	FIANCHETTO DX NERO BK-231P	1		
2-1	87129-HML-000	ADESIVO "Iniezione"	1		
2-2	87131-L4A-000	EMBLEMA DX	1		
2	8350G-L4A-000-QU	FIANCHETTO DX BIANCO WH-300P	1		
2-1	87129-HML-000	ADESIVO "Iniezione"	1		
2-2	87131-L4A-000	EMBLEMA DX	1		
2	8350G-L4A-000-XE	FIANCHETTO DX ROSSO R-193S	1		
2-1	87129-HML-000	ADESIVO "Iniezione"	1		
2-2	87131-L4A-000	EMBLEMA DX	1		
3	8360G-L4A-000-IP	FIANCHETTO SX ANTRACITE GY-517S	1		
3-1	87129-HML-000	ADESIVO "Iniezione"	1		
3-2	87132-L4A-000	EMBLEMA SX	1		
3	8360G-L4A-000-KX	FIANCHETTO SX NERO BK-231P	1		
3-1	87129-HML-000	ADESIVO "Iniezione"	1		
3-2	87132-L4A-000	EMBLEMA SX	1		
3	8360G-L4A-000-QU	FIANCHETTO SX BIANCO WH-300P	1		
3-1	87129-HML-000	ADESIVO "Iniezione"	1		
3-2	87132-L4A-000	EMBLEMA SX	1		
3	8360G-L4A-000-XE	FIANCHETTO SX ROSSO R-193S	1		
3-1	87129-HML-000	ADESIVO "Iniezione"	1		
3-2	87132-L4A-000	EMBLEMA SX	1		

4	8365G-L4A-000-IP	COPER.FIANC.POST. ANTRACITE GY-517S	1		

F12 BODY COVER

LX40A1-6[MAXSYM 400]

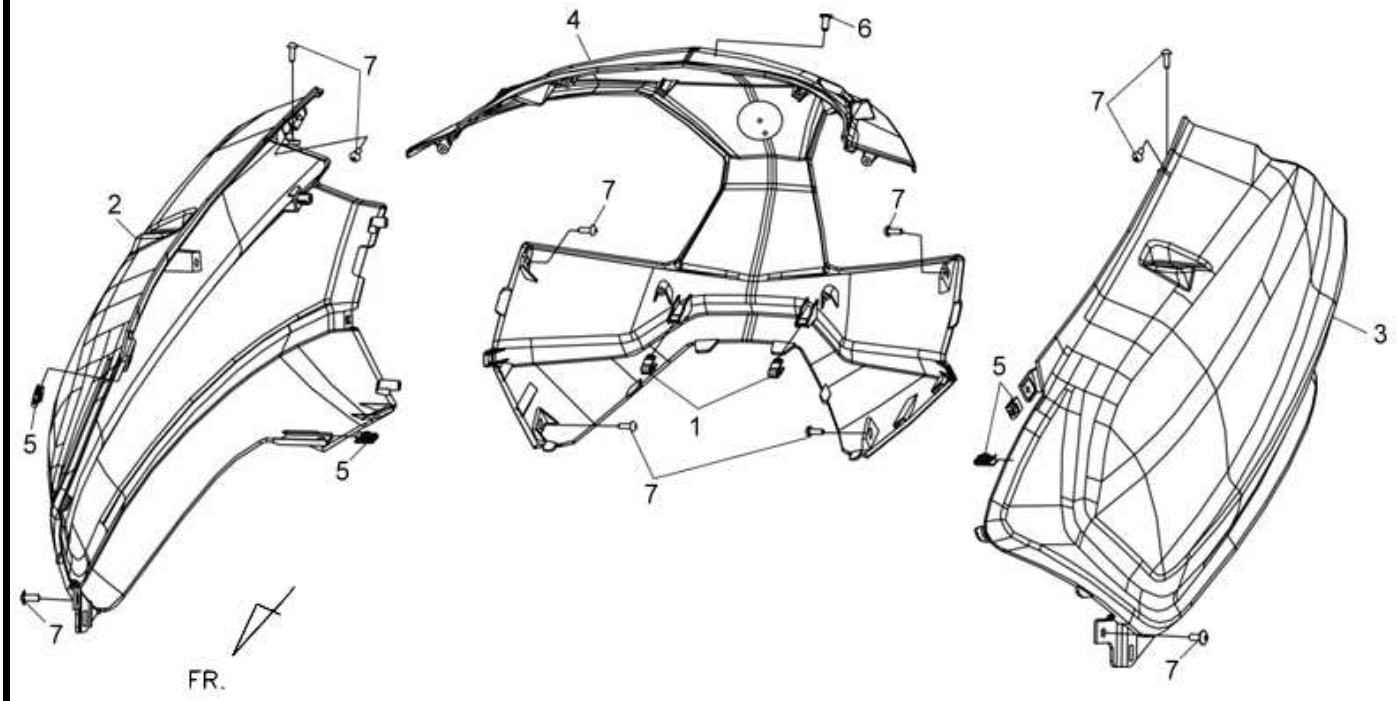

Pictures reference only

PARTS NUMBER		DESCRIPTION	QTY	EFFECTIVE DATE	
4-1	87553-VS1-100	FR.COVER LID EMBLEM	1		
4	8365G-L4A-000-KX	COPER.FIANC.POST. NERO BK-231P	1		
4-1	87553-VS1-100	FR.COVER LID EMBLEM	1		
4	8365G-L4A-000-QU	COPER.FIANC.POST.BIANCO WH-300P	1		
4-1	87553-VS1-100	FR.COVER LID EMBLEM	1		
4	8365G-L4A-000-XE	COPER.FIANC.POST. ROSSO R-193S	1		
4-1	87553-VS1-100	FR.COVER LID EMBLEM	1		
5	90308-X04-000	FLANGE SPECIAL NUT 10MM	4		
6	93891-05012-08	WASHER SCREW 5X12	1		
7	93903-35280	TAPPING SCREW 5*12	10		

※ Please check the color & stripe information according to the color index !

※N/A = SUBSTITUTE ※Y = EXCHANGEABLE ※N =NOT EXCHANGEABLE

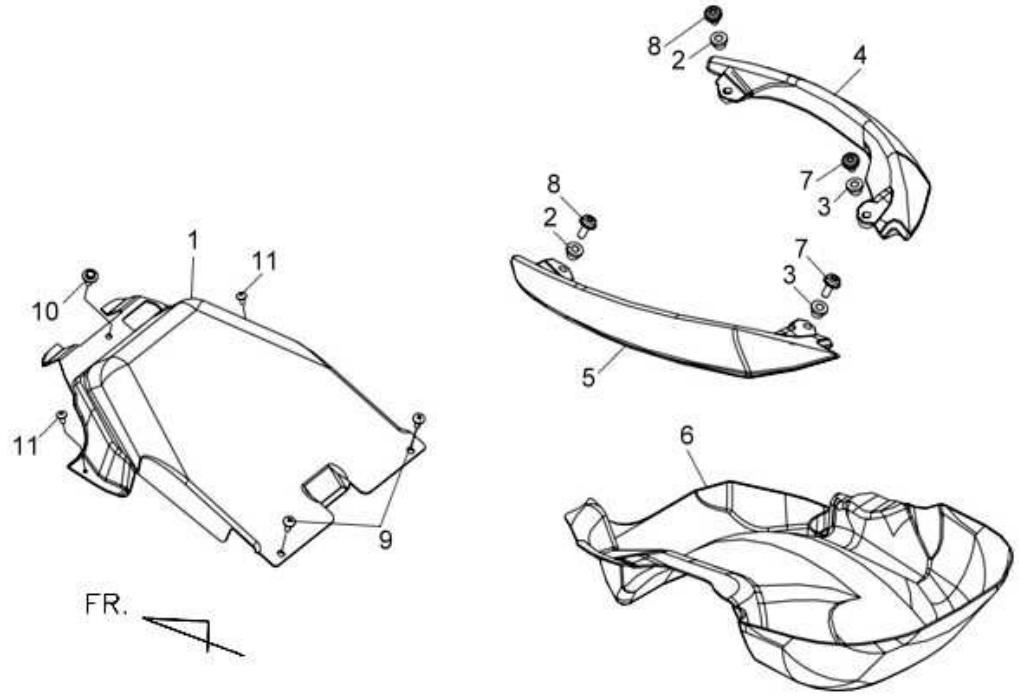

Pictures reference only

	PARTS NUMBER	DESCRIPTION	QTY	EFFECTIVE DATE	
1	64316-L4A-000	COPERCHIO AIR BOX	1		
2	81204-L4A-000	RR. GRIP COLLAR A	2		
3	81205-L4A-000	RR. GRIP COLLAR B	2		
4	81310-L4A-000-IP	MANIGLIA DX POST.ANTRACITE GY.517S	1		
4	81310-L4A-000-KX	MANIGLIA DX POST.NERA BK-231P	1		
4	81310-L4A-000-QU	MANIGLIA DX POST.BIANCA WH-300P	1		
4	81310-L4A-000-XE	MANIGLIA DX POST.ROSSA R-193S	1		
5	81320-L4A-000-IP	MANIGLIA SX POST.ANTRACITE GY.517S	1		
5	81320-L4A-000-KX	MANIGLIA SX POST.NERA BK-231P	1		
5	81320-L4A-000-QU	MANIGLIA SX POST.BIANCA WH-300P	1		
5	81320-L4A-000-XE	MANIGLIA SX POST.ROSSA R-193S	1		
6	83630-L4A-000	LUGGAGE BOX MAT	1		
7	90101-L4A-000	VITE SPECIALE 8MM	2		
8	90105-G19-000	VITE SPECIALE 8MM	2		
9	90115-G02-000	VITE FLANGIATA 6X16	2		
10	93404-06016-07	BOLT WASHER 6X16	1		
11	93903-35220	VITE AUTOFILETTANTE 5X12	2		

※ Please check the color & stripe information according to the color index !

※N/A = SUBSTITUTE ※Y = EXCHANGEABLE ※N =NOT EXCHANGEABLE

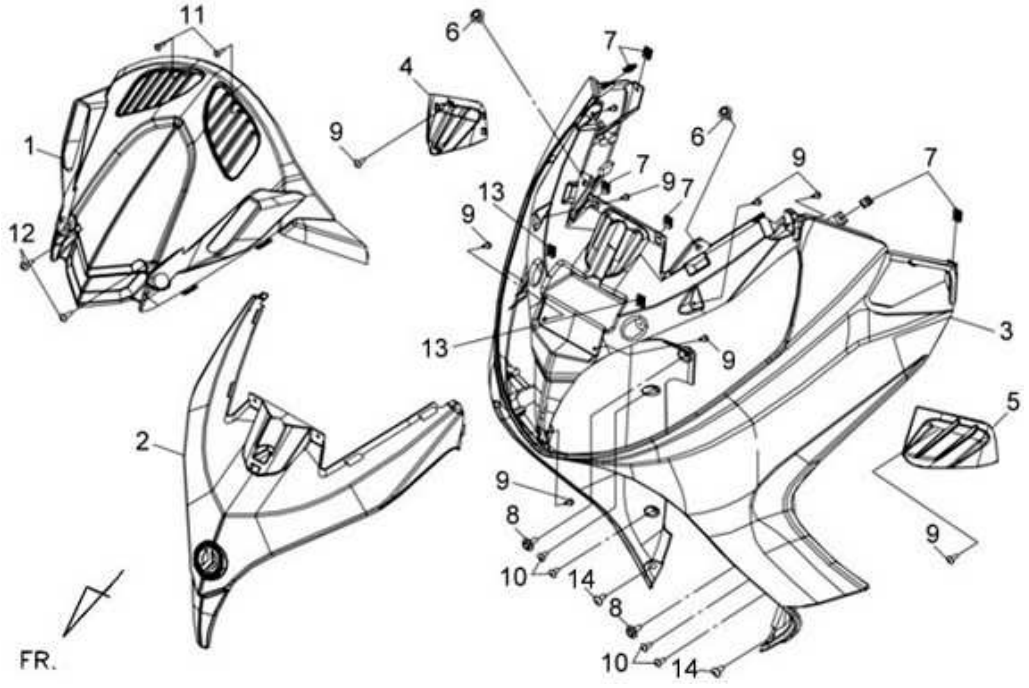

Pictures reference only

	PARTS NUMBER	DESCRIPTION	QTY	EFFECTIVE DATE	
1	53209-L4A-000	COPERCHIO CRUSCOTTO BK-001U	1		
1	53209-L4A-010	COPERCHIO CRUSCOTTO BK-001U	1	2011/8/12	N
2	5320G-L4A-000-IP	COPERCHIO SCUDO ANT.ANTRACITEGY-517S	1		
2	5320G-L4A-000-KX	COPERCHIO SCUDO ANT.NERO BK-231P	1		
2	5320G-L4A-000-QU	COPERCHIO SCUDO ANT.BIANCO WH-300P	1		
2	5320G-L4A-000-XE	COPERCHIO SCUDO ANT.ROSSO R-193S	1		
2-1	87553-L4A-000	LOGO SYM	1		
3	64301-L4A-000-IP	SCUDO INF.(SPOILER) ANTRACITEGY-517S	1		
3	64301-L4A-000-KX	SCUDO INF.(SPOILER) NERO BK-231P	1		
3	64301-L4A-000-QU	SCUDO INF.(SPOILER) BIANCO WH-300P	1		
3	64301-L4A-000-XE	SCUDO INF.(SPOILER) ROSSO R-193S	1		
4	64306-L4A-000-KA	GRIGLIA DX	1		
5	64308-L4A-000-KA	GRIGLIA SX	1		
6	90112-N01-000	FLANGE BOLT 6MM	2		
7	90308-X04-000	FLANGE SPECIAL NUT 10MM	6		
8	93404-06016-07	BOLT WASHER 6X16	2		
9	93903-34380	VITE AUTOFILETTANTE 4X12	7		
10	93903-35280	TAPPING SCREW 5*12	4		
11	93903-44380	VITE AUTOFILETTANTE 4X12	2		
12	93903-45380	VITE AUTOFILETTANTE 5X16	2		
13	95801-06012-08	FLANGE BOLT	2		
14	90115-REA-000	PLASTIC NUT 6MM	2		

※ Please check the color & stripe information according to the color index !

※N/A = SUBSTITUTE ※Y = EXCHANGEABLE ※N =NOT EXCHANGEABLE

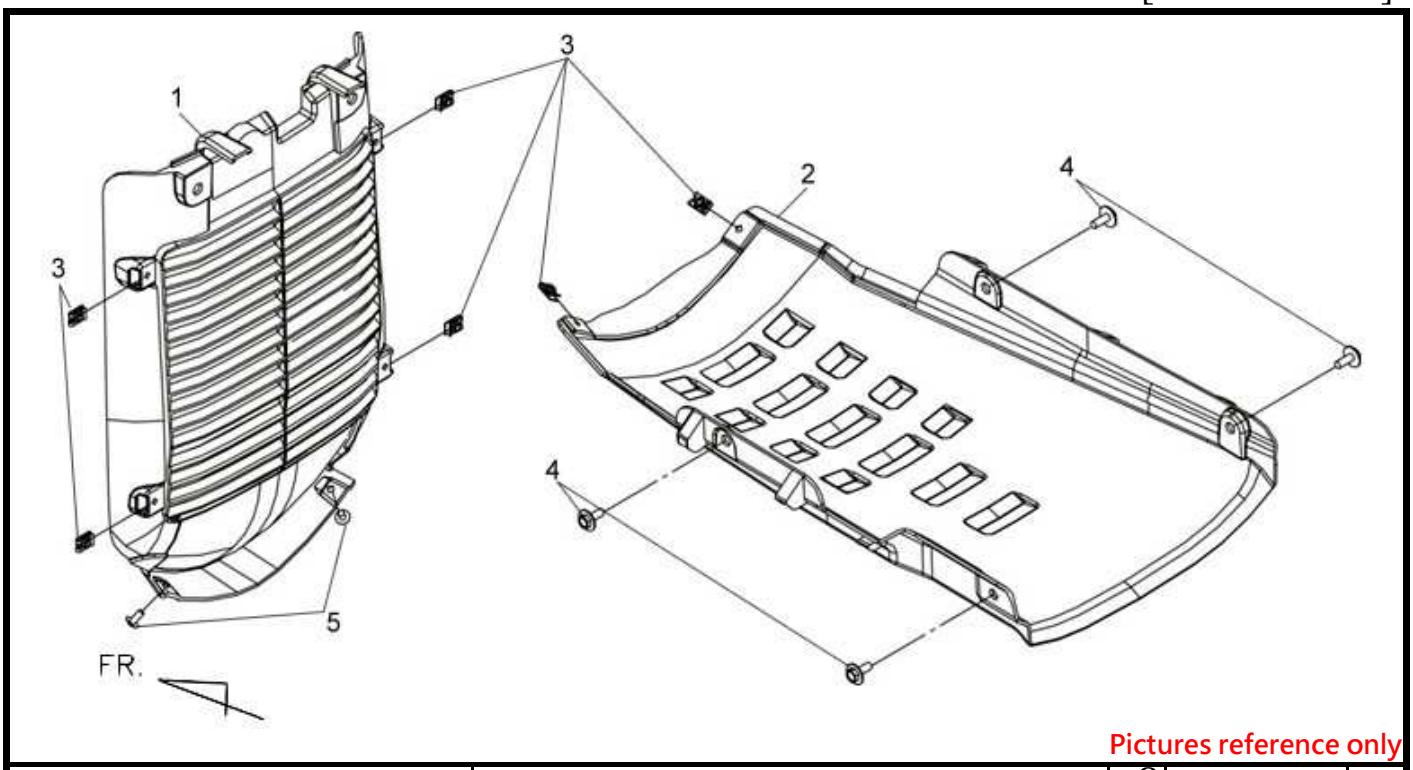

Pictures reference only

	PARTS NUMBER	DESCRIPTION	QTY	EFFECTIVE DATE	
1	64300-L4A-000	COPERCHIO INFERIORE BK-001U	1		
2	64305-L4A-000	COPERCHIO RADIATORE BK-001U	1		
3	90308-X04-000	FLANGE SPECIAL NUT 10MM	6		
4	93404-06016-07	BOLT WASHER 6X16	4		
5	93903-35280	TAPPING SCREW 5*12	2		

※ Please check the color & stripe information according to the color index !

※N/A = SUBSTITUTE ※Y = EXCHANGEABLE ※N =NOT EXCHANGEABLE

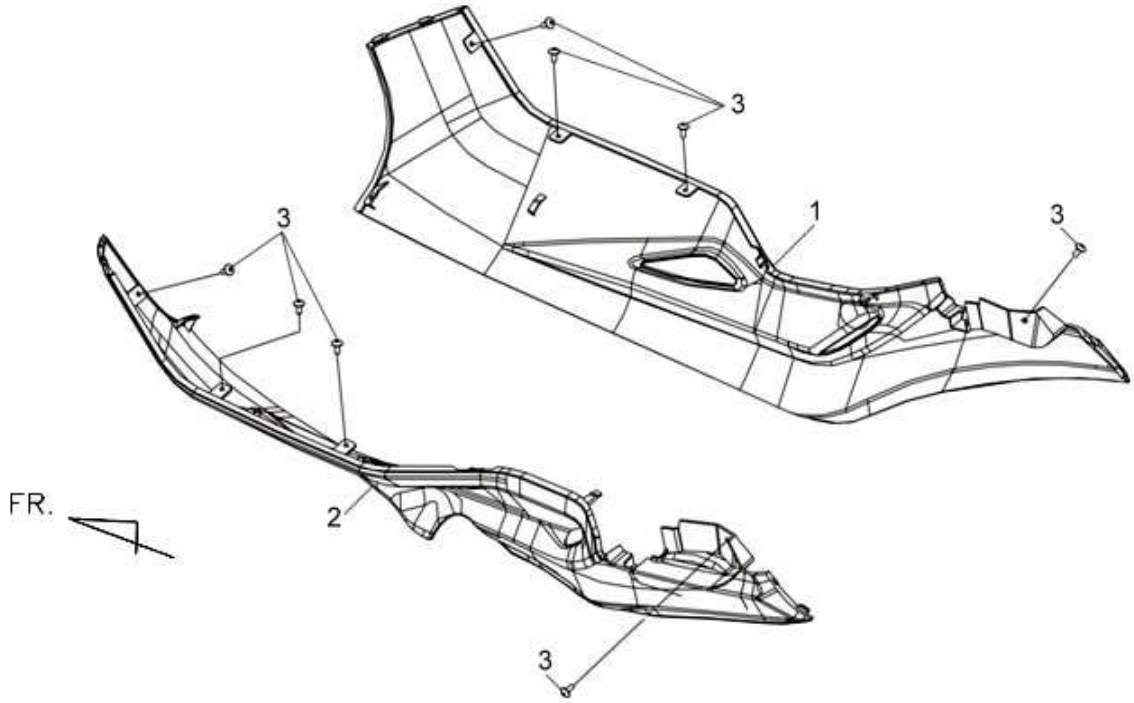

Pictures reference only

	PARTS NUMBER	DESCRIPTION	QTY	EFFECTIVE DATE	
1	8352A-L4A-000-KX	FIANCHETTO INF.DX NERO BK-231P	1		
1	8352A-L4A-000-IP	FIANCHETTO INF.DX ANTRACITE GY-517S	1		
1	8352A-L4A-000-QU	FIANCHETTO INF.DX BIANCO WH-300P	1		
1	8352A-L4A-000-XE	FIANCHETTO INF.DX ROSSO R-193S	1		
2	8362A-L4A-000-IP	FIANCHETTO INF.SX ANTRACITE GY-517S	1		
2	8362A-L4A-000-KX	FIANCHETTO INF.SX NERO BK-231P	1		
2	8362A-L4A-000-QU	FIANCHETTO INF.SX BIANCO WH-300P	1		
2	8362A-L4A-000-XE	FIANCHETTO INF.SX ROSSO R-193S	1		
3	93903-35280	TAPPING SCREW 5*12	8		

※ Please check the color & stripe information according to the color index !

※N/A = SUBSTITUTE ※Y = EXCHANGEABLE ※N =NOT EXCHANGEABLE

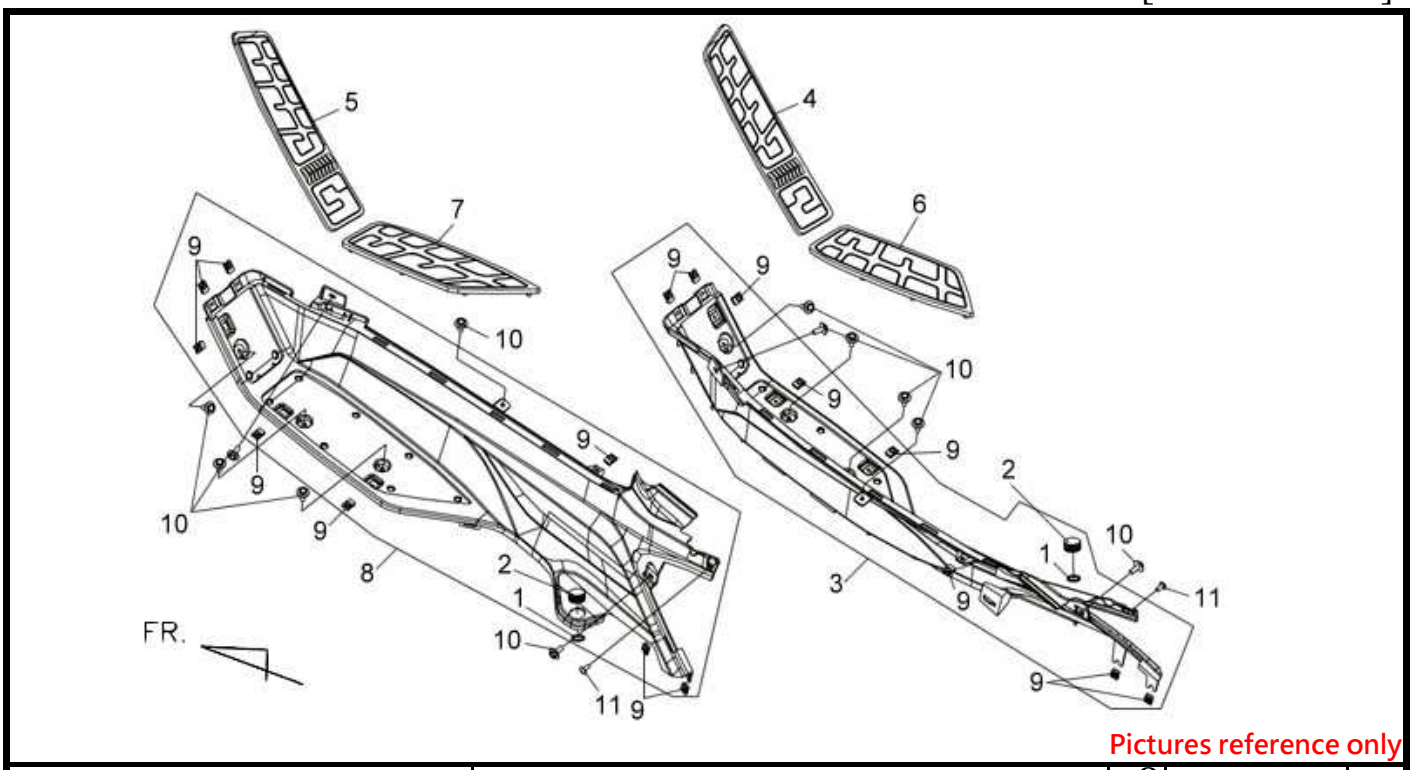

Pictures reference only

	PARTS NUMBER	DESCRIPTION	QTY	EFFECTIVE DATE	
1	64303-LEA-000	DISTANZIALE	2		
2	64306-LEA-000	TAPPO	2		
3	6431A-L4A-000-KA	PAVIMENTO DX COMPL.	1		
4	64321-L4A-000-KA	TAPPETINO DX SUP.	1		
5	64322-L4A-000-KA	TAPPETINO SX SUP.	1		
6	64323-L4A-000-KA	TAPPETINO DX INF.	1		
7	64324-L4A-000-KA	TAPPETINO SX INF.	1		
8	6433A-L4A-000	PAVIMENTO SX COMPL.	1		
9	90308-X04-000	FLANGE SPECIAL NUT 10MM	16		
10	93404-06016-07	BOLT WASHER 6X16	12		
11	93903-35220	SCREW TAPPING	2		

※ Please check the color & stripe information according to the color index !

※N/A = SUBSTITUTE ※Y = EXCHANGEABLE ※N =NOT EXCHANGEABLE

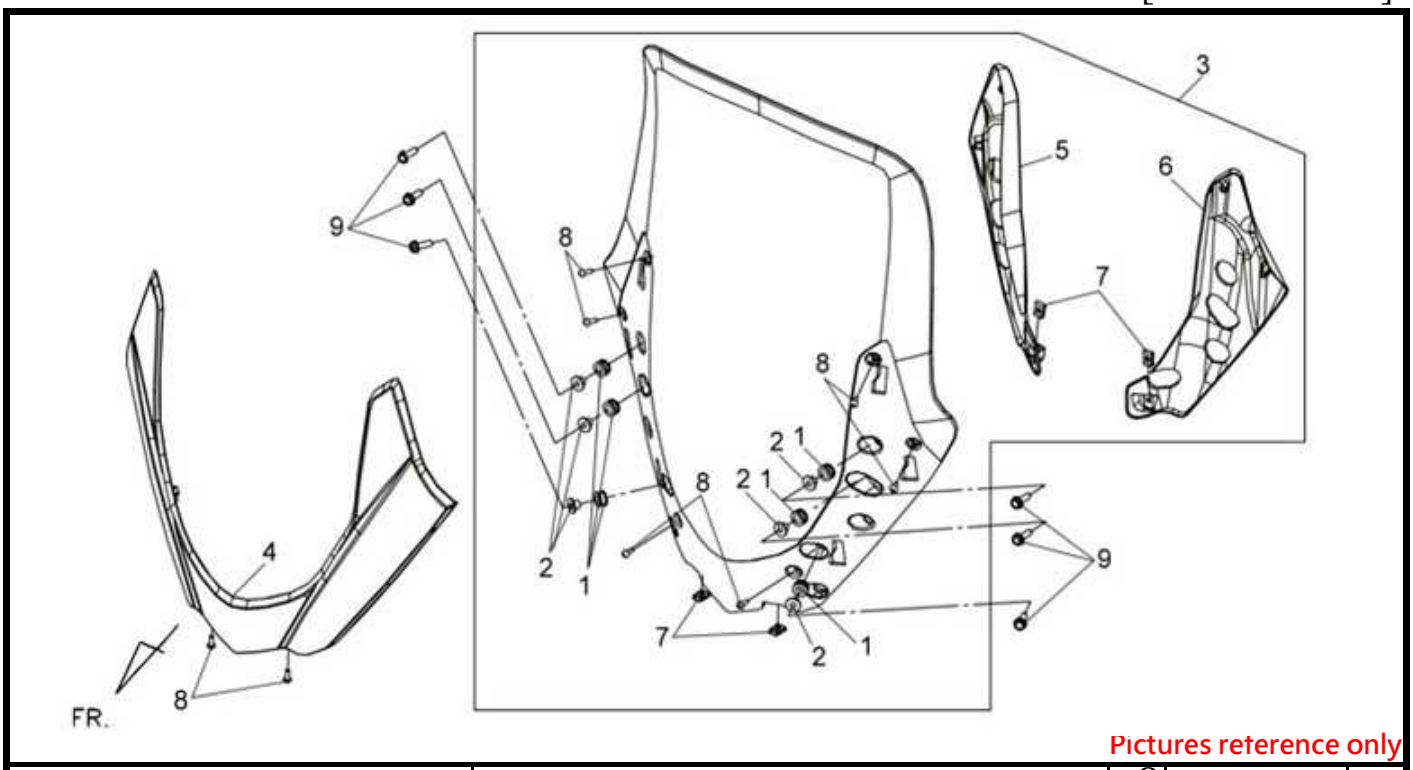

Pictures reference only

	PARTS NUMBER	DESCRIPTION	QTY	EFFECTIVE DATE	
1	61104-APA-000	FR. FENDER RUBBER	6		
2	61201-APA-000	DISTANZIALE PARAF.ANT.	6		
3	6710A-L4A-000	PARABREZZA COMPLETO	1		
4	67110-L4A-000-KA	COPERCHIO PARABREZZA	1		
5	67112-L4A-000	COPER.DX PARABREZZA	1		
6	67114-L4A-000	COPER.SX PARABREZZA	1		
7	90302-M92-000	SPRING NUT 4MM	4		
8	93903-34380	VITE AUTOFILETTANTE 4X12	8		
9	95801-06025-07	VITE FLANGIATA 6X25	6		

※ Please check the color & stripe information according to the color index !

※N/A = SUBSTITUTE ※Y = EXCHANGEABLE ※N =NOT EXCHANGEABLE

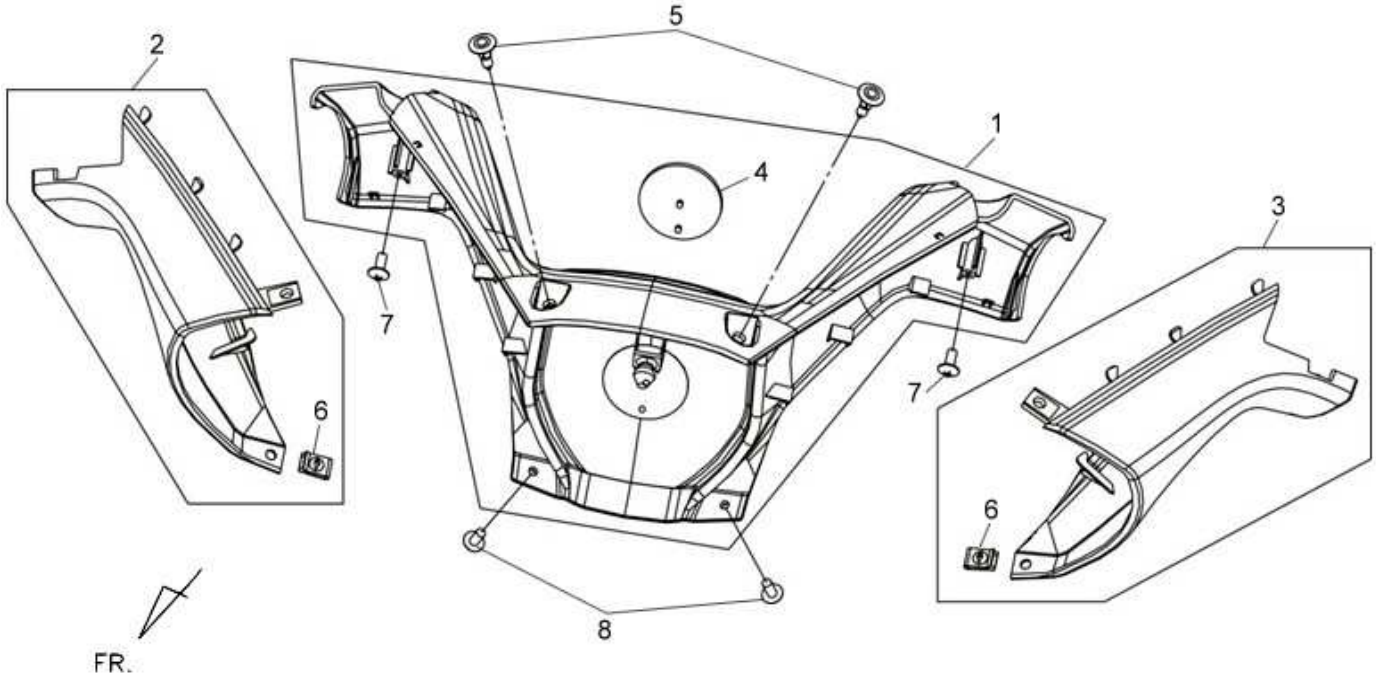

Pictures reference only

	PARTS NUMBER	DESCRIPTION	QTY	EFFECTIVE DATE	
1	5311A-L4A-000-IP	COPRIMANUBRIO SUP.GY-517S	1		
1	5311A-L4A-000-KX	COPRIMANUBRIO SUP.BK-231P	1		
1	5311A-L4A-000-QU	COPRIMANUBRIO SUP.WH-300P	1		
1	5311A-L4A-000-XE	COPRIMANUBRIO SUP.R-193S	1		
2	5312A-L4A-000	COPRIMANUBRIO INF.DX	1		
3	5312B-L4A-000	COPRIMANUBRIO INF.SX	1		
4	87553-VS1-100	FR.COVER LID EMBLEM	1		
5	90115-REA-000	PLASTIC UNT 6MM	2		
6	90308-X04-000	FLANGE SPECIAL NUT 10MM	2		
7	93903-35280	TAPPING SCREW 5*12	2		
8	93903-35380	VITE AUTOFILETTANTE 5X16	2		

※ Please check the color & stripe information according to the color index !

※N/A = SUBSTITUTE ※Y = EXCHANGEABLE ※N =NOT EXCHANGEABLE

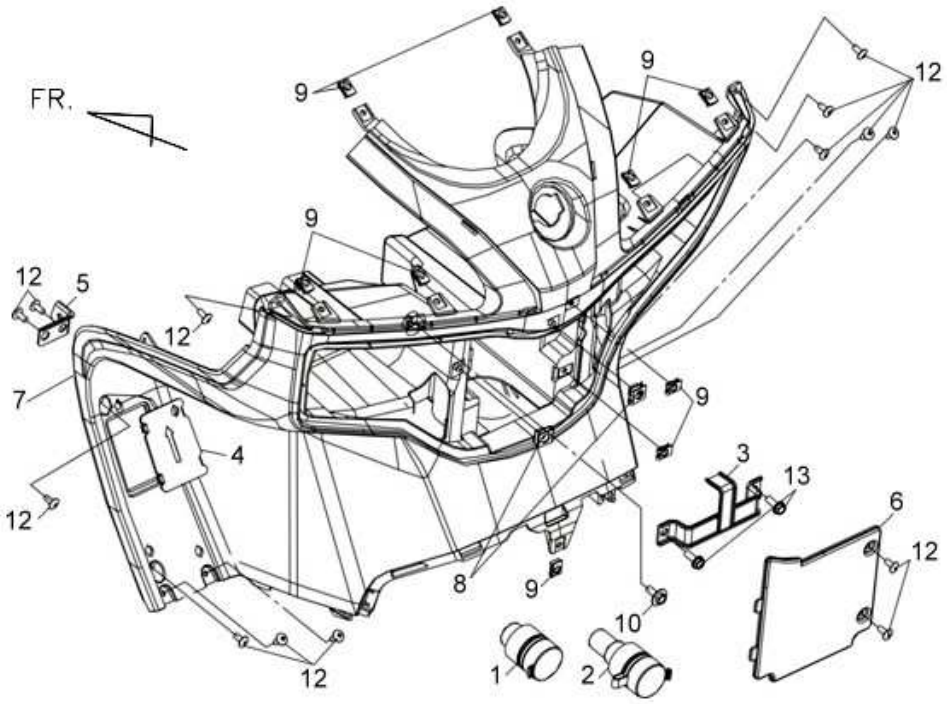

Pictures reference only

	PARTS NUMBER	DESCRIPTION	QTY	EFFECTIVE DATE	
1	38600-L4A-000	PRESA 12V	1		
2	38650-L4A-000	PRESA USB	1		
3	50548-L4A-000	BATTERY BAND	1		
4	81145-L4A-000	SPORTELLINO	1		
5	81147-L4A-000	SUPPORTO	1		
6	8114A-L4A-000	COPERCHIO BATTERIA	1		
7	81231-L4A-000-KA	SCUDO INTERNO	1		
8	90305-M9Q-000	DADO A CLIP 6MM	2		
9	90308-X04-000	FLANGE SPECIAL NUT 10MM	9		
10	93404-06016-08	BOLT WASHER 6X16	1		
11	93903-35280	TAPPING SCREW 5*12	12		
12	95801-06016-08	FLANGE BOLT 6X16	2		

※ Please check the color & stripe information according to the color index !

※N/A = SUBSTITUTE ※Y = EXCHANGEABLE ※N =NOT EXCHANGEABLE

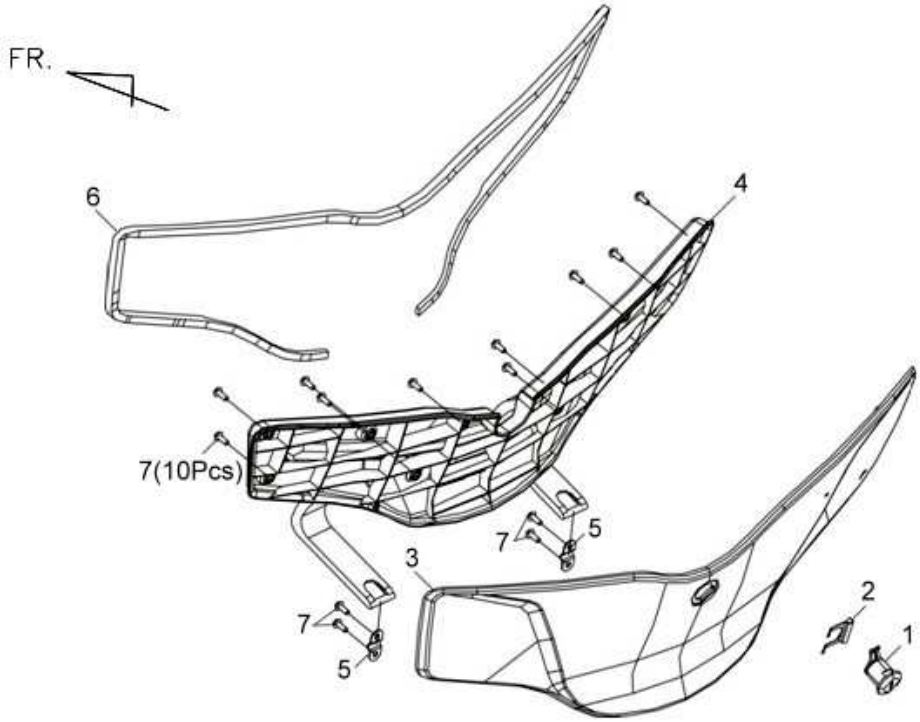

Pictures reference only

	PARTS NUMBER	DESCRIPTION	QTY	EFFECTIVE DATE	
1	77233-L4A-000	SERRATURA SPORTELLO BAULETTO	1		
2	75581-A16-000	MOLLA SERRATURA	1		
3	81141-L4A-000-IP	SPORTELLO SCUDO INT.ANTR.GY-517S	1		
3	81141-L4A-000-KX	SPORTELLO SCUDO INT.NERO BK-231P	1		
3	81141-L4A-000-QU	SPORTELLO SCUDO INT.BIANCO WH-300P	1		
3	81141-L4A-000-XE	SPORTELLO SCUDO INT.ROSSO R-193S	1		
4	81142-L4A-000	INNER BOX LID STIFFENER(BK-001U)	1		
5	81146-L4A-000	INNER BOX LID HANGE STAY	2		
6	81148-L4A-000	GUARNIZIONE SPORTELLO BAULETTO	1		
7	93903-34380	VITE AUTOFILETTANTE 4X12	14		

※ Please check the color & stripe information according to the color index !

※N/A = SUBSTITUTE ※Y = EXCHANGEABLE ※N =NOT EXCHANGEABLE

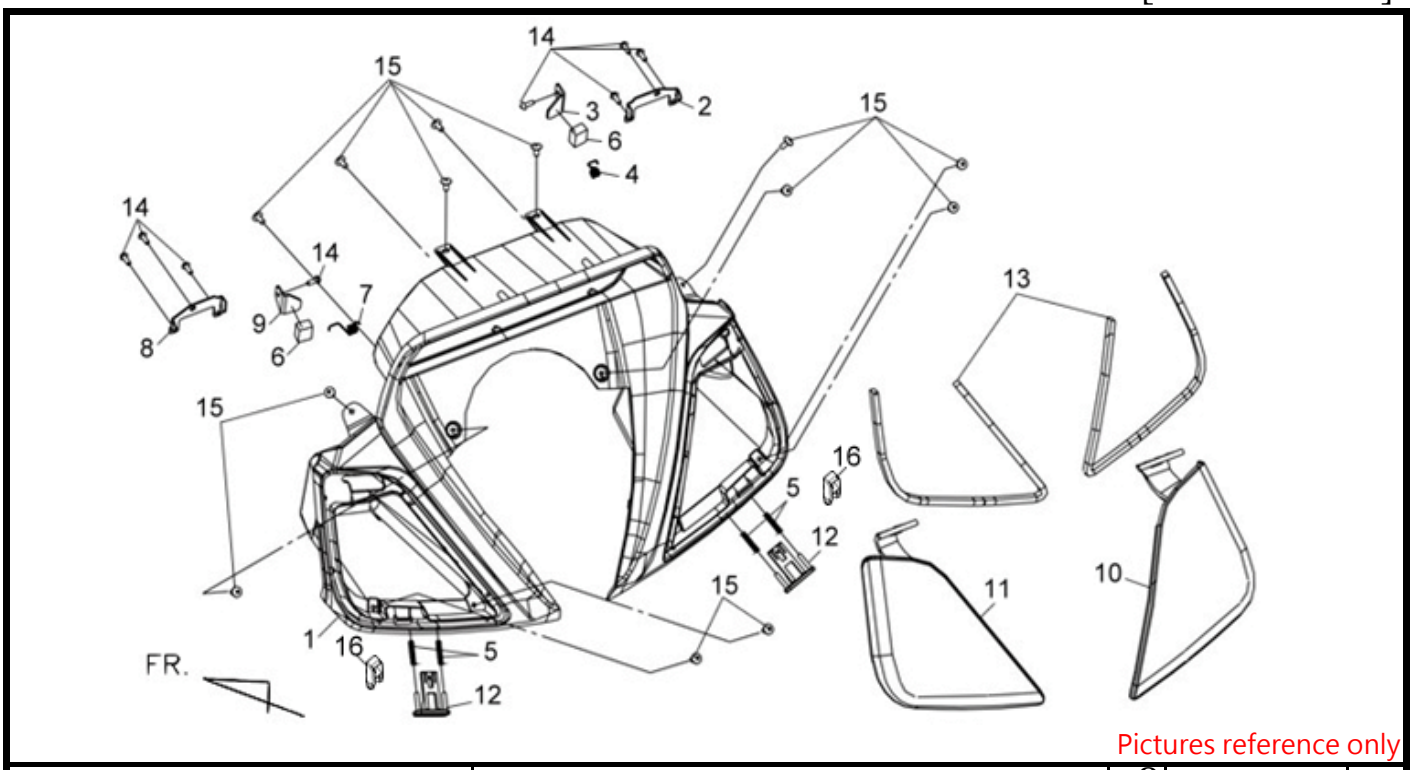

Pictures reference only

	PARTS NUMBER	DESCRIPTION	QTY	EFFECTIVE DATE	
1	53208-L4A-000-KA	CORNICE STRUMENTI	1		
1	53208-L4A-005-KA	METER PANEL BK-001U	1	2011/07/07	N
2	53222-L4A-000	COIN BOX LID HINGE STAY	1		
3	53223-L4A-000	STOPPER RUBBER STAY	1		
4	53224-L4A-000	R.SPRING A	1		
5	53228-L4A-000	SPRING B	4		
6	53229-L4A-000	STOPPER RUBBER	2		
7	53230-L4A-000	L.SPRING A	1		
8	53232-L4A-000	L.COIN BOX LID HINGE STAY	1		
9	53233-L4A-000	L.STOPPER RUBBER STAY	1		
10	81151-L4A-000	SPORTELLO DX	1		
11	81152-L4A-000	SPORTELLO SX	1		
12	81153-L4A-000	TASTO APERTURA SPORTELLO	2		
13	81156-L4A-000	GUARNIZIONE SPORTELLO	2		
14	93903-34280	TAPPING SCREW	8		
15	93903-35280	TAPPING SCREW 5*12	13		
16	81155-L4A-000	COIN BOX HOOK	2		

※ Please check the color & stripe information according to the color index !

※N/A = SUBSTITUTE ※Y = EXCHANGEABLE ※N =NOT EXCHANGEABLE

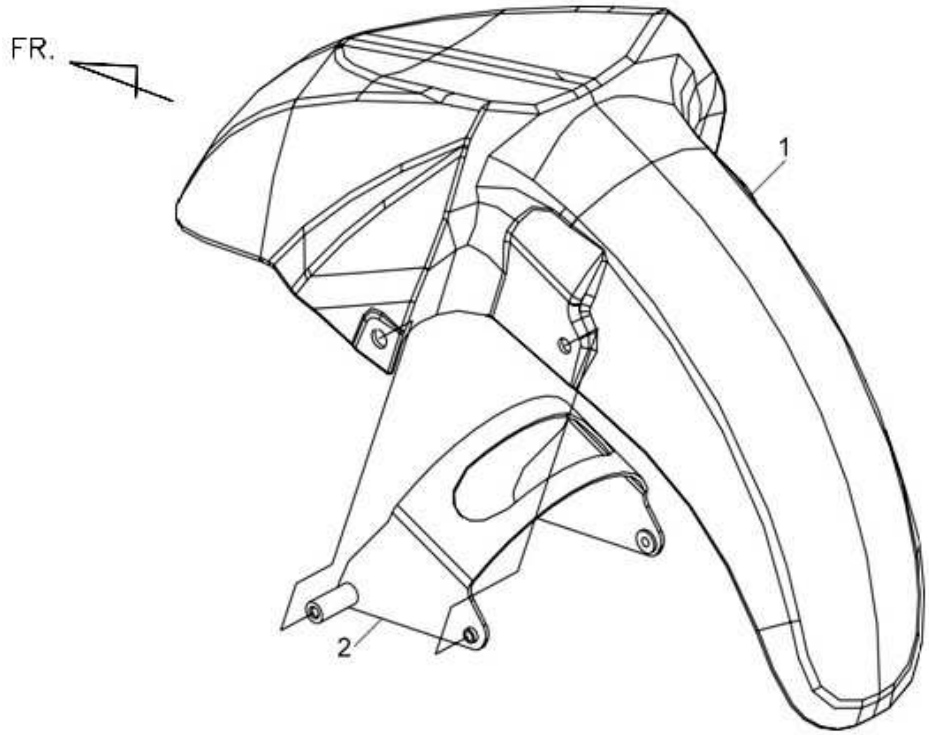

Pictures reference only

	PARTS NUMBER	DESCRIPTION	QTY	EFFECTIVE DATE	
1	61100-L4A-000-IP	PARAFANGO ANT.ANTR.GY-517S	1		
1	61100-L4A-000-KX	PARAFANGO ANT.NERO BK-231P	1		
1	61100-L4A-000-QU	PARAFANGO ANT.BIANCO WH-300P	1		
1	61100-L4A-000-XE	PARAFANGO ANT.ROSSO R-193S	1		
2	61105-L4A-000	SUPPORTO PARAFANGO ANT.	1		

※ Please check the color & stripe information according to the color index !

※N/A = SUBSTITUTE ※Y = EXCHANGEABLE ※N =NOT EXCHANGEABLE

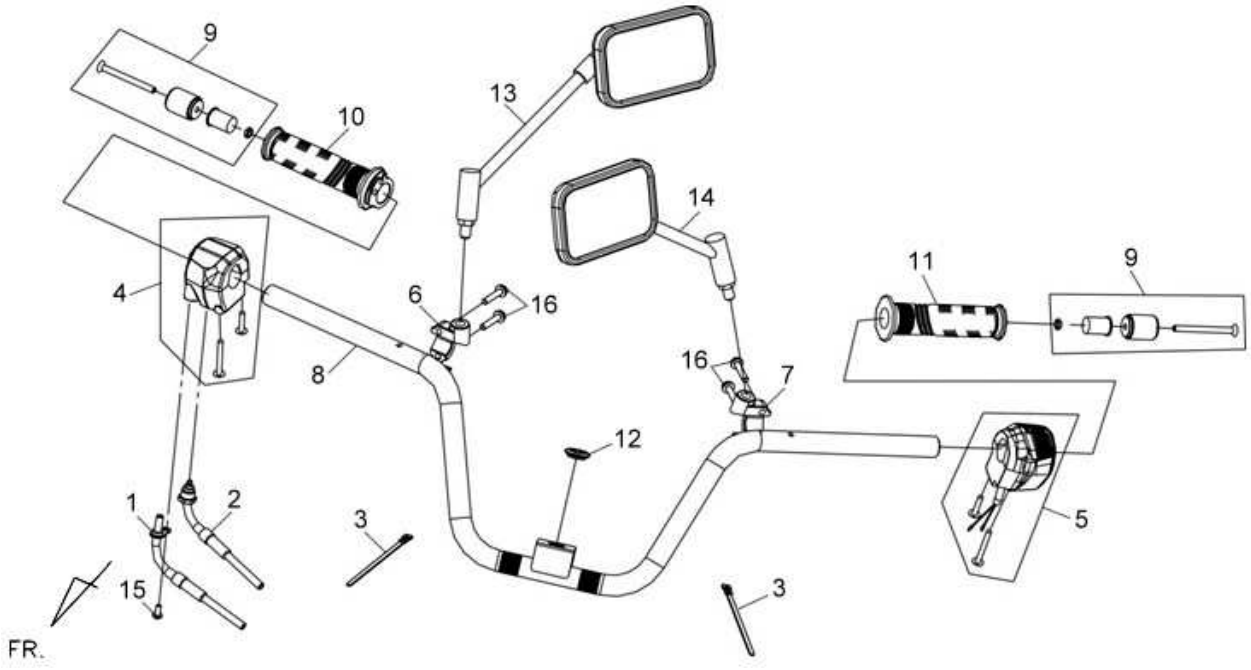

Pictures reference only

	PARTS NUMBER	DESCRIPTION	QTY	EFFECTIVE DATE	
1	17910-L4A-000	TRASMISSIONE GAS CHIUSURA	1		
2	17920-L4A-000	TRASMISSIONE GAS APERTURA	1		
3	32160-A3A-900	WIRE BAND 200X8	2		
4	35150-L4A-000	COMANDO DX COMPLETO	1		
5	35200-HNL-000	COMANDO SX COMPLETO	1		
6	45517-L4A-000	SUPPORTO DX POMPA FRENI	1		
7	45518-L4A-000	SUPPORTO SX POMPA FRENI	1		
8	53100-L4A-000	MANUBRIO	1		
9	53104-N02-000	CONTRAPPESO MANUBRIO COMPLETO	2		
10	53140-L4A-000	COMANDO GAS	1		
11	53166-L4A-000	MANOPOLA SX	1		
12	61105-RCA-000	FR.FENDER GROMMET	1		
13	88110-L4A-000	SPECCHIO DX	1		
13	88110-L4A-002	SPECCHIO DX	1	2011/9/26	
14	88120-L4A-000	SPECCHIO SX	1		
14	88120-L4A-002	SPECCHIO SX	1	2011/9/26	
15	93891-05012-07	WASHER SCREW 5X12	1		
16	95801-06022-07	FLANGE BOLT 6X22	4		

※ Please check the color & stripe information according to the color index !

※N/A = SUBSTITUTE ※Y = EXCHANGEABLE ※N =NOT EXCHANGEABLE

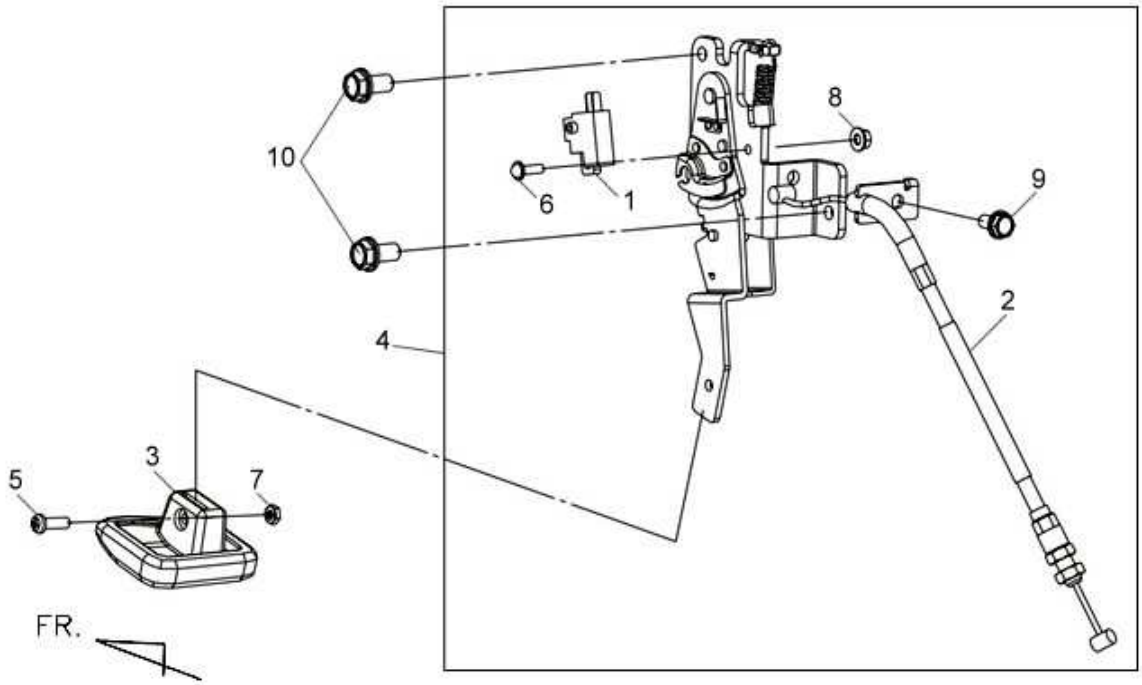

Pictures reference only

	PARTS NUMBER	DESCRIPTION	QTY	EFFECTIVE DATE	
1	35350-KBN-900	INTERRUTTORE STOP SX	1		
2	45450-L4A-000	CAVO FRENO DI STAZIONAMENTO	1		
3	53171-L4A-000	LEVA PARCHEGGIO	1		
4	5317A-L4A-000	COMANDO PARCHEGGIO COMPL.	1		
5	93500-05014-0G	PAN SCREW 5*14	1		
6	93892-04016-08	WASHER SCREW 4X16	1		
7	94001-05070-0S	DADO 5MM	1		
8	94050-04080	FLANGE NUT 4MM	1		
9	95801-06012-08	FLANGE BOLT	1		
10	93892-04016-08	WASHER SCREW 4X16	2		

※ Please check the color & stripe information according to the color index !

※N/A = SUBSTITUTE ※Y = EXCHANGEABLE ※N =NOT EXCHANGEABLE

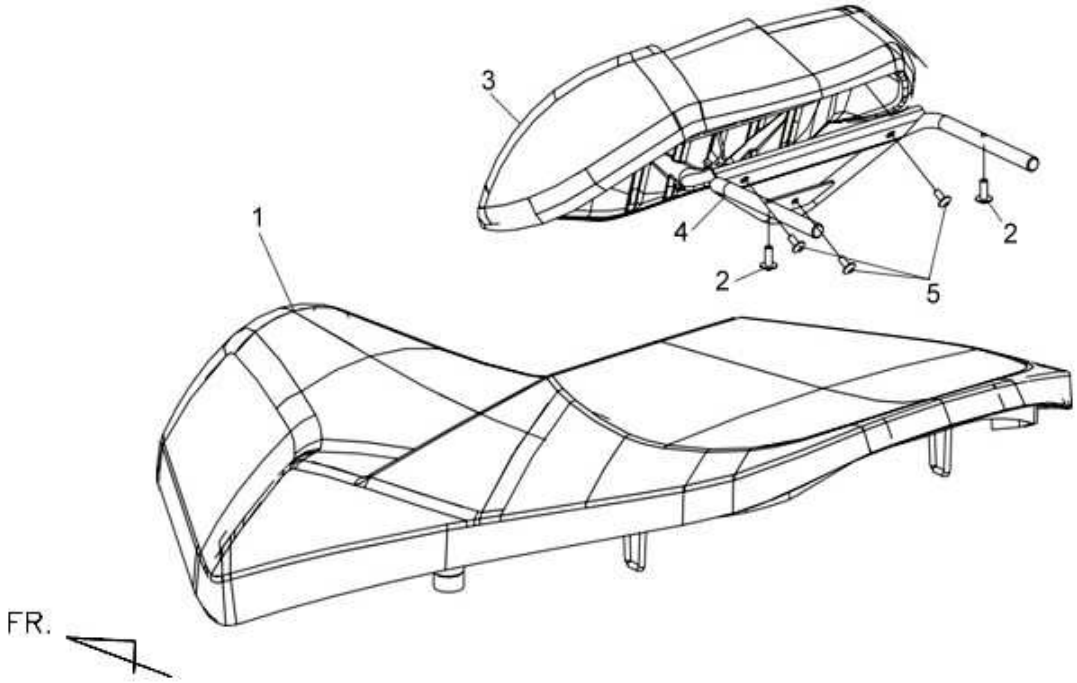

Pictures reference only

	PARTS NUMBER	DESCRIPTION	QTY	EFFECTIVE DATE	
1	77100-L4A-000	SELLA	1		
2	77203-HMA-010	BACK SEAT SET BOLT	2		
3	77300-L4A-000	SCHIENALINO SELLA ANTERIORE	1		
4	77302-L4A-000	BACK SEAT ADJUST BAR	1		
5	93903-35280	TAPPING SCREW 5*12	3		

※ Please check the color & stripe information according to the color index !

※N/A = SUBSTITUTE ※Y = EXCHANGEABLE ※N =NOT EXCHANGEABLE

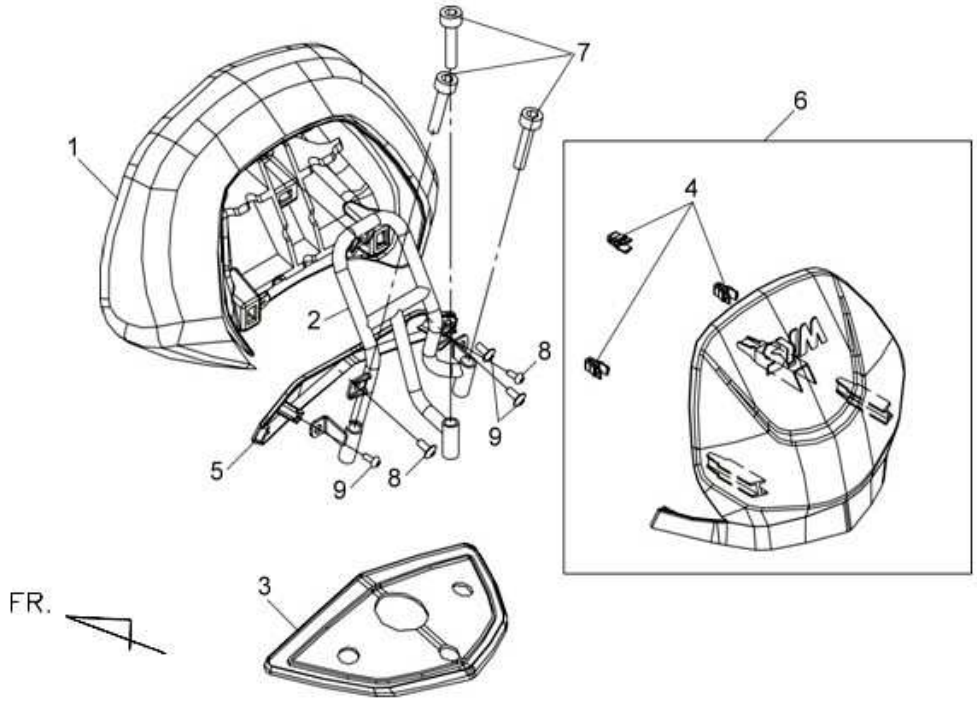

Pictures reference only

	PARTS NUMBER	DESCRIPTION	QTY	EFFECTIVE DATE	
1	77401-L4A-000	BACK SEAT INNER BASE BK-001U	1		
2	77402-L4A-000	TELAIETTO SCHIENALINO	1		
3	77403-L4A-000	BACK SEAT RUBBER BK-001U	1		
4	77405-L4A-000	CLIP	3		
5	77406-L4A-000-IP	COPERCHIO SCHIENAL.ANTRACITE GY-517S	1		
5	77406-L4A-000-KX	COPERCHIO SCHIENAL.NERO BK-231P	1		
5	77406-L4A-000-QU	COPERCHIO SCHIENAL.BIANCO WH-300P	1		
5	77406-L4A-000-XE	COPERCHIO SCHIENAL.ROSSO R-193S	1		
6	7741A-L4A-000-IP1	SCHIENALINO ANTRACITE GY-517S	1		
6	7741A-L4A-000-KX1	SCHIENALINO NERO BK-231P	1		
6	7741A-L4A-000-QU1	SCHIENALINO BIANCO WH-300P	1		
6	7741A-L4A-000-XE1	SCHIENALINO ROSSO R-193S	1		
7	90103-L4A-000	SOCKET BOLT 8*45	3		
8	93903-34380	VITE AUTOFILETTANTE 4X12	2		
9	93903-35280	TAPPING SCREW 5*12	3		

※ Please check the color & stripe information according to the color index !

※N/A = SUBSTITUTE ※Y = EXCHANGEABLE ※N =NOT EXCHANGEABLE

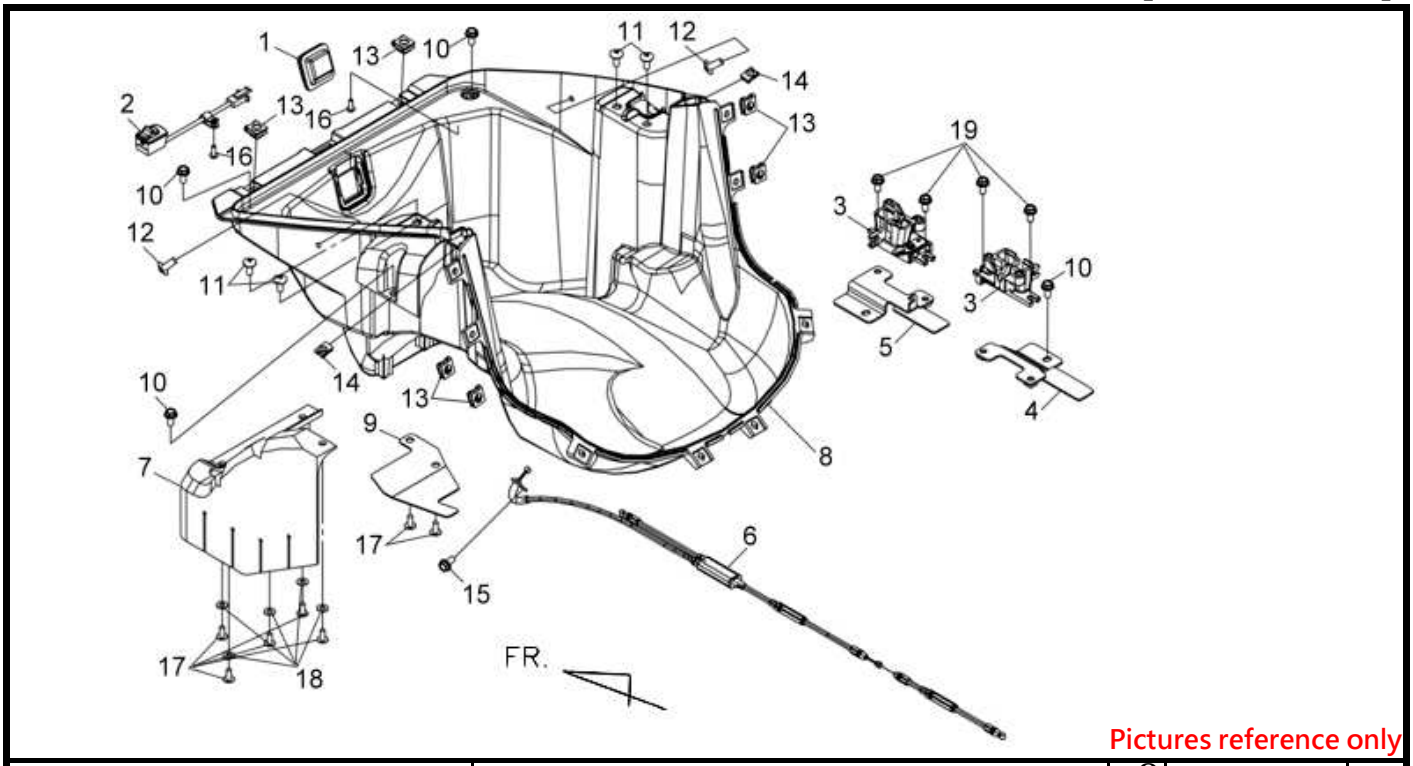

Pictures reference only

	PARTS NUMBER	DESCRIPTION	QTY	EFFECTIVE DATE	
1	35370-L4A-000	LUCE VANO SOTTOSELLA	1		
2	36600-L4A-000	INTERRUTTORE ANTIFURTO	1		
3	77230-L4A-000	SEAT CATCH COMP	1		
4	77236-L4A-000	RH. SEAT CATCH STAY	1		
5	77238-L4A-000	LH. SEAT CATCH STAY	1		
6	77240-L4A-000	CAVO APERTURA SELLA	1		
7	80104-L4A-000	LUGGAGE BOX PLATE BK-001U	1		
8	81250-L4A-000	VANO SOTTOSELLA	1		
9	81251-L4A-000	LUGGAGE BOX STAY	1		
10	90112-N01-000	FLANGE BOLT 6MM	4		
11	90115-G02-000	VITE FLANGIATA 6X16	4		
12	90115-REA-000	PLASTIC UNT 6MM	2		
13	90305-M9Q-000	DADO A CLIP 6MM	6		
14	90308-X04-000	FLANGE SPECIAL NUT 10MM	2		
15	93891-05012-08	WASHER SCREW 5X12	1		
16	93903-24380	VITE AUTOFILETTANTE 4X12	2		
17	93903-35220	SCREW TAPPING	7		
18	94101-05800	RONDELLA 5MM	5		
19	95801-06012-07	VITE FLANGIATA 6X12	4		

※ Please check the color & stripe information according to the color index !

※N/A = SUBSTITUTE ※Y = EXCHANGEABLE ※N =NOT EXCHANGEABLE

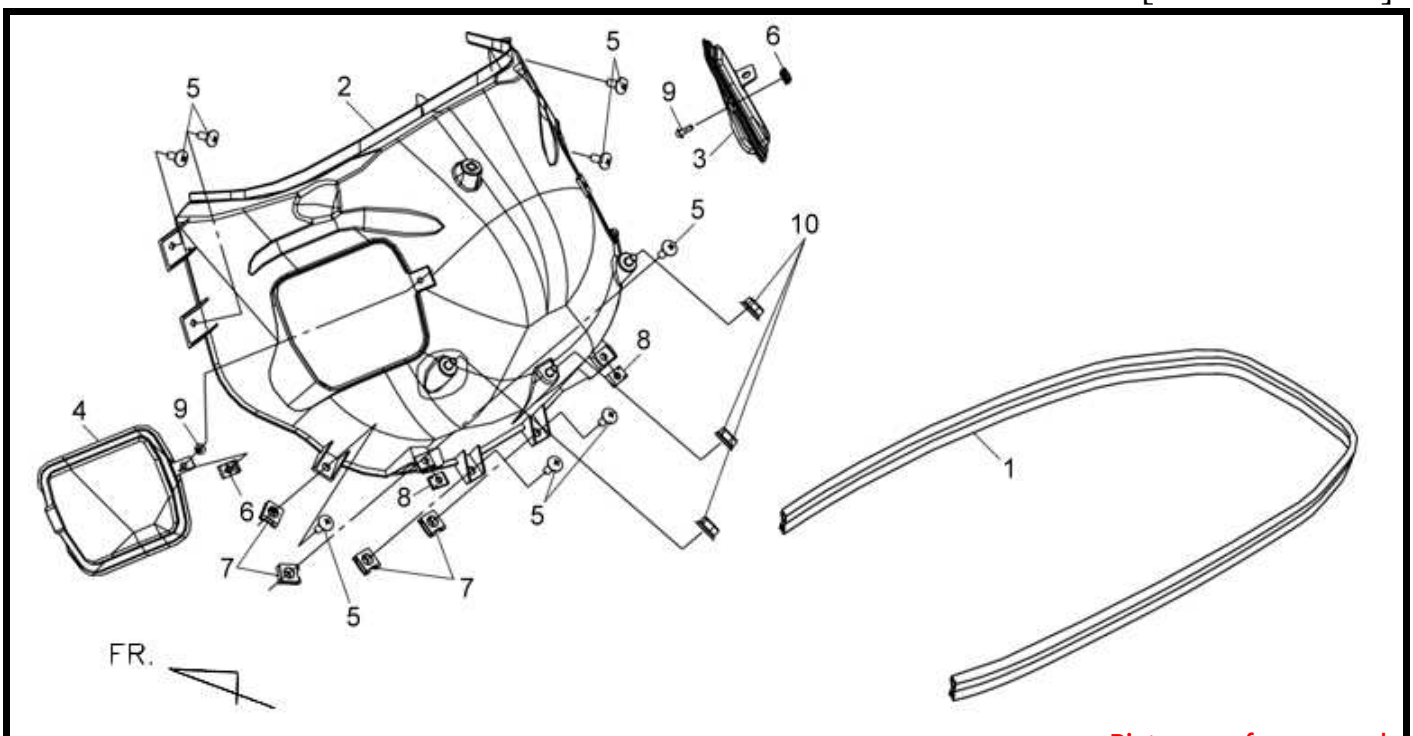

Pictures reference only

	PARTS NUMBER	DESCRIPTION	QTY	EFFECTIVE DATE	
1	77115-L4A-000	GUARNIZIONE SELLA	1		
2	81254-L4A-000	VANO SOTTOSELLA POST.	1		
3	81256-L4A-000	COPERCHIO DX	1		
4	81258-L4A-000	COPERCHIO SX	1		
5	90115-G02-000	VITE FLANGIATA 6X16	8		
6	90302-M92-000	SPRING NUT 4MM	2		
7	90305-M9Q-000	DADO A CLIP 6MM	4		
8	90308-X04-000	SPECIAL NUT 5MM	2		
9	93903-24380	VITE AUTOFILETTANTE 4X12	2		
10	94050-06070	DADO FLANGIATO 6MM	3		

※ Please check the color & stripe information according to the color index !

※N/A = SUBSTITUTE ※Y = EXCHANGEABLE ※N =NOT EXCHANGEABLE

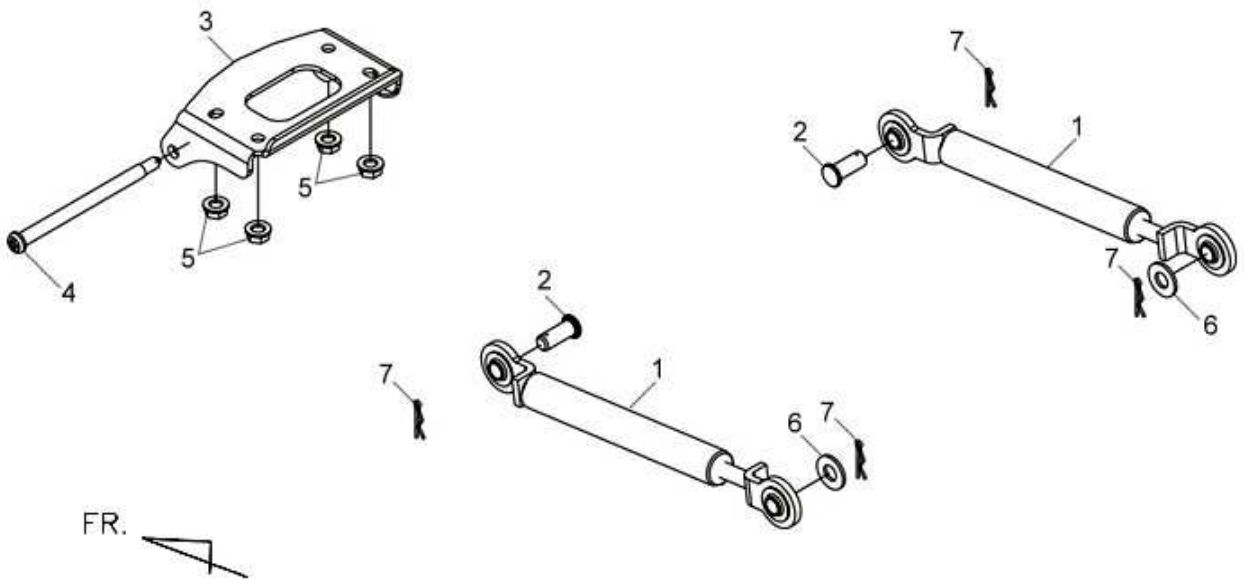

Pictures reference only

	PARTS NUMBER	DESCRIPTION	QTY	EFFECTIVE DATE	
1	74480-L4A-000	AMMORTIZZATORE VANO SELLA	2		
2	74481-L4A-000	PERNO	2		
3	77201-L4A-000	CERNIERA	1		
4	90106-L4A-000	PERNO	1		
5	94050-06070	DADO FLANGIATO 6MM	4		
6	94101-08800	RONDELLA 8MM	2		
7	94251-08400	LOCK PIN 8MM (LATCH PIN)	4		

※ Please check the color & stripe information according to the color index !

※N/A = SUBSTITUTE ※Y = EXCHANGEABLE ※N =NOT EXCHANGEABLE

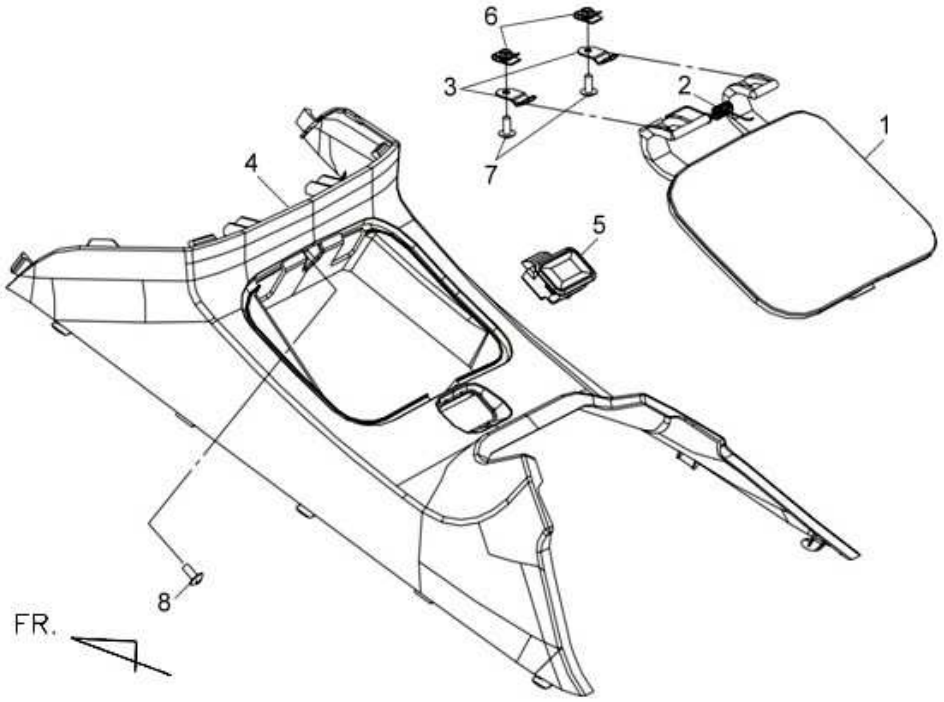

Pictures reference only

	PARTS NUMBER	DESCRIPTION	QTY	EFFECTIVE DATE	
1	64311-L4A-000-KA	SPORTELLO BENZINA	1		
2	64313-L4A-000	MOLLA	1		
3	64314-L4A-000	FUEL TANK COVER HANGE STAY	2		
4	64315-L4A-000-KA	TUNNEL CENTRALE	1		
5	64320-L4A-000	FUEL TANK COVER LOCK	1		
6	90308-X04-000	FLANGE SPECIAL NUT 10MM	2		
7	93901-25180	TAPPING SCREW 5X10	2		
8	93903-35280	TAPPING SCREW 5*12	1		

※ Please check the color & stripe information according to the color index !

※N/A = SUBSTITUTE ※Y = EXCHANGEABLE ※N =NOT EXCHANGEABLE

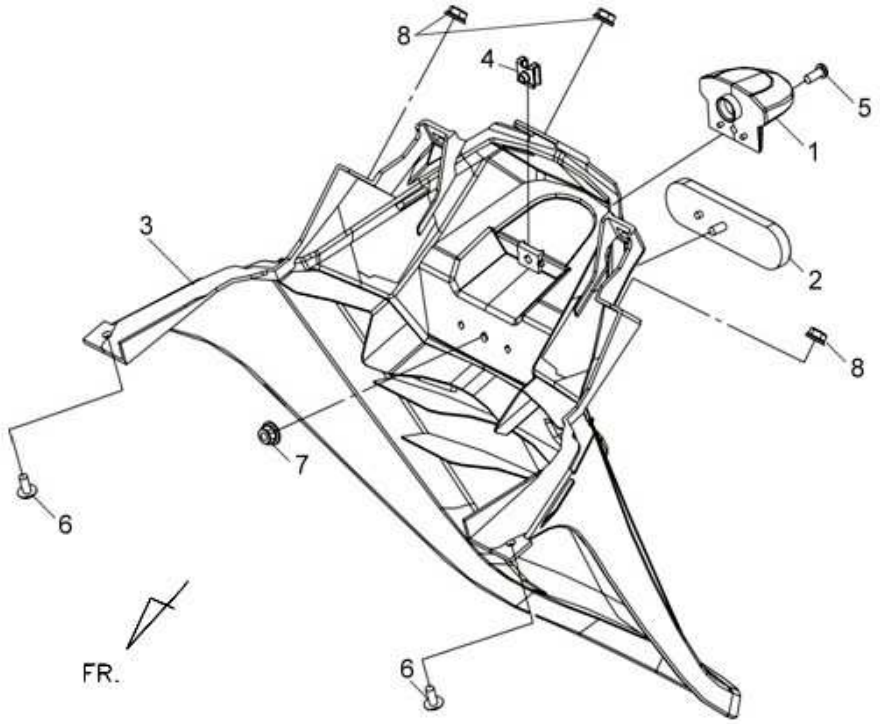

Pictures reference only

	PARTS NUMBER	DESCRIPTION	QTY	EFFECTIVE DATE	
1	33740-E4D-010	LUCE TARGA COMPL.	1		
2	33743-REC-000	CATADIOTTRO	1		
3	80100-L4A-000	PARAFANGO POSTERIORE	1		
4	90303-RCA-000	SUS NUT 5MM	1		
5	93500-05016-0H	PAN SCREW 5X16	1		
6	93903-35220	SCREW TAPPING	2		
7	94050-05080	DADO FLANGIATO 5MM	1		
8	94050-06070	DADO FLANGIATO 6MM	3		

※ Please check the color & stripe information according to the color index !

※N/A = SUBSTITUTE ※Y = EXCHANGEABLE ※N =NOT EXCHANGEABLE

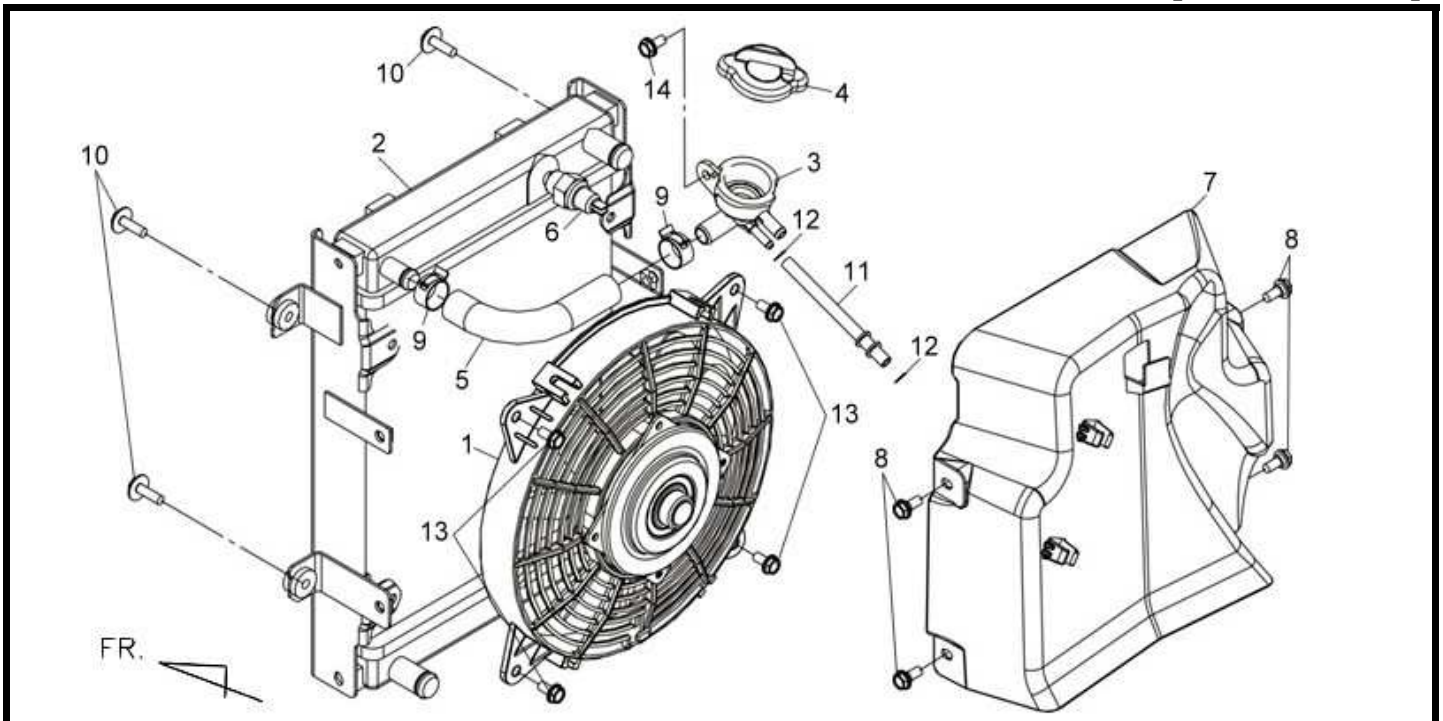

Pictures reference only

	PARTS NUMBER	DESCRIPTION	QTY	EFFECTIVE DATE	
1	19005-L4A-000	ELETTROVENTOLA	1		
2	19010-L4A-000	RADIATORE ACQUA	1		
3	19039-LVA-000	BOCCHETTONE RADIATORE	1		
4	19111-H9A-000	TAPPO RADIATORE	1		
5	19125-L4A-000	MANICOTTO	1		
6	37760-HMA-000	BULBO TEMPARATURA (RADIATORE)	1		
7	64312-L4A-000	PROTEZIONE	1		
8	90111-N01-000	VITE FLANGIATA 6MM	4		
9	90682-SB0-671	FASCETTA	2		
10	93404-06020-07	BOLT WASHER 6X20	4		
11	95001-80550-40	TUBO BENZINA 5.3X170	1		
12	95002-02130	TUBE CLIP B 12.5	2		
13	95801-06012-07	VITE FLANGIATA 6X12	4		
14	95801-06012-08	VITE FLANGIATA 6X12	1		

※ Please check the color & stripe information according to the color index !

※N/A = SUBSTITUTE ※Y = EXCHANGEABLE ※N =NOT EXCHANGEABLE

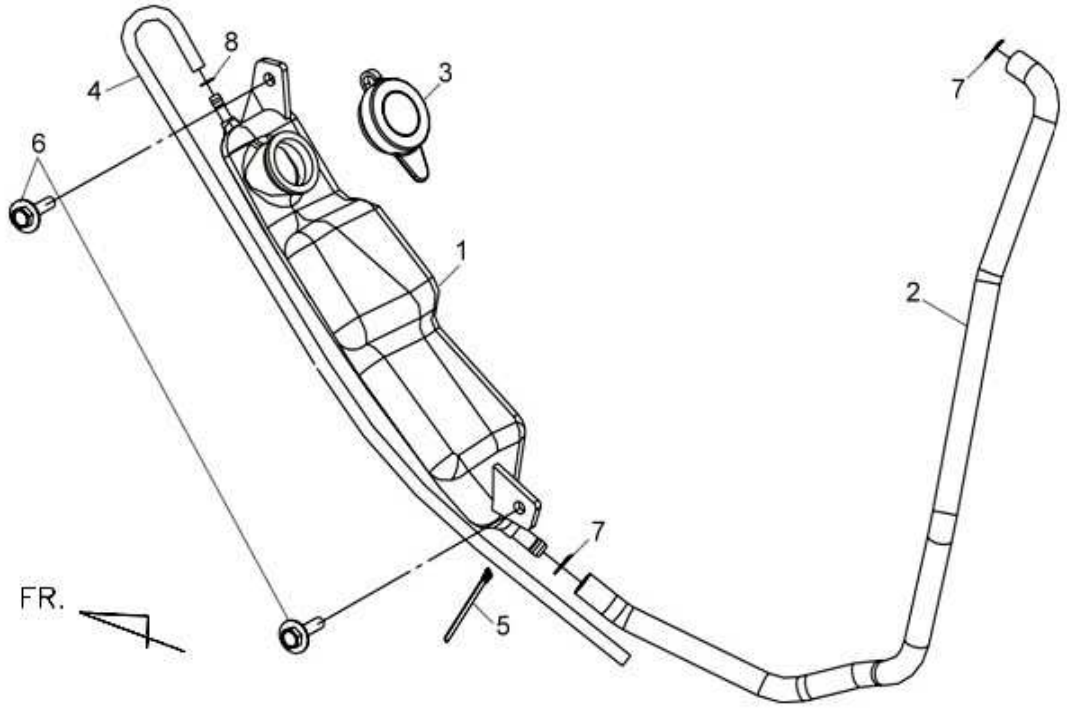

Pictures reference only

	PARTS NUMBER	DESCRIPTION	QTY	EFFECTIVE DATE	
1	19101-L4A-000	VASO ESPANSIONE	1		
2	19102-REA-000	RESERVE TANK TUBE B	1		
3	19104-MBO-700	TAPPO VASO ESPANSIONE	1		
4	19109-H9A-010	TUBO	1		
5	32161-H6T-000	WIRE BAND 100X8	1		
6	93404-06012-08	VITE FLANGIATA 6X12	2		
7	95002-02130	TUBE CLIP B 12.5	2		
8	95002-02080	FASCETTA TUBO B8	1		

※ Please check the color & stripe information according to the color index ! TEAMWORLD IND. 2011.05

※N/A = SUBSTITUTE ※Y = EXCHANGEABLE ※N =NOT EXCHANGEABLE

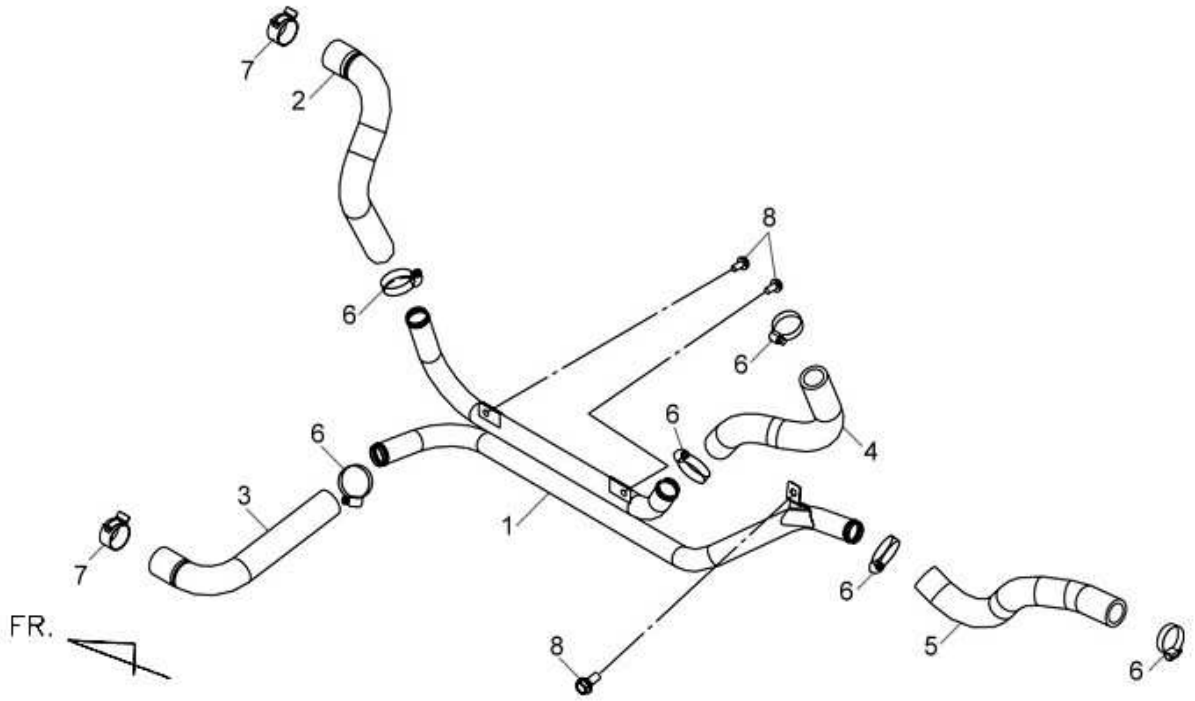

Pictures reference only

	PARTS NUMBER	DESCRIPTION	QTY	EFFECTIVE DATE	
1	19110-L4A-000	MANICOTTO	1		
2	19121-L4A-000	TUBO INGRESSO RADIATORE	1		
3	19123-L4A-000	TUBO USCITA RADIATORE	1		
4	19501-L4A-000	MANICOTTO A	1		
5	19503-L4A-000	MANICOTTO C	1		
6	19505-REA-000	HOSE CLAMP	6		
7	19511-REA-000	CLIP WATER HOSE	2		
8	95801-06012-08	FLANGE BOLT	3		

※ Please check the color & stripe information according to the color index !

※N/A = SUBSTITUTE ※Y = EXCHANGEABLE ※N =NOT EXCHANGEABLE

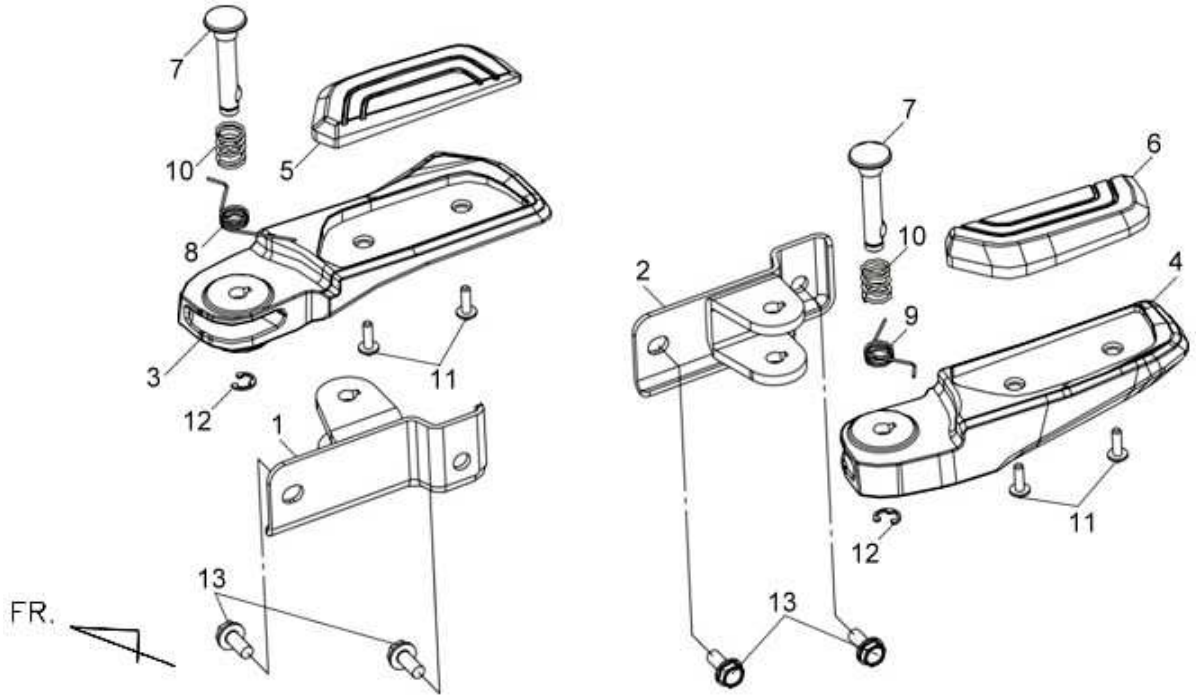

Pictures reference only

	PARTS NUMBER	DESCRIPTION	QTY	EFFECTIVE DATE	
1	50613-L4A-300	SUPPORTO PEDANA DX POST.	1		
2	50614-L4A-300	SUPPORTO PEDANA SX POST.	1		
3	50621-L4A-000	PEDANA DX POST.	1		
4	50622-L4A-000	PEDANA SX POST.	1		
5	50623-L4A-000	GOMMINO PEDANA DX POST.	1		
6	50624-L4A-000	GOMMINO PEDANA SX POST.	1		
7	50625-L4A-000	PERNO	2		
8	50626-HMA-000	MOLLA DX	1		
9	50627-HMA-000	MOLLA SX	1		
10	50629-HMA-000	MOLLA	2		
11	93892-05012-08	WASHER SCREW 5X12	4		
12	90605-166-720	ANELLO SEEGER 7MM	2		
13	95801-08016-07	FLANGE BOLT 8X16	4		

※ Please check the color & stripe information according to the color index !

※N/A = SUBSTITUTE ※Y = EXCHANGEABLE ※N =NOT EXCHANGEABLE

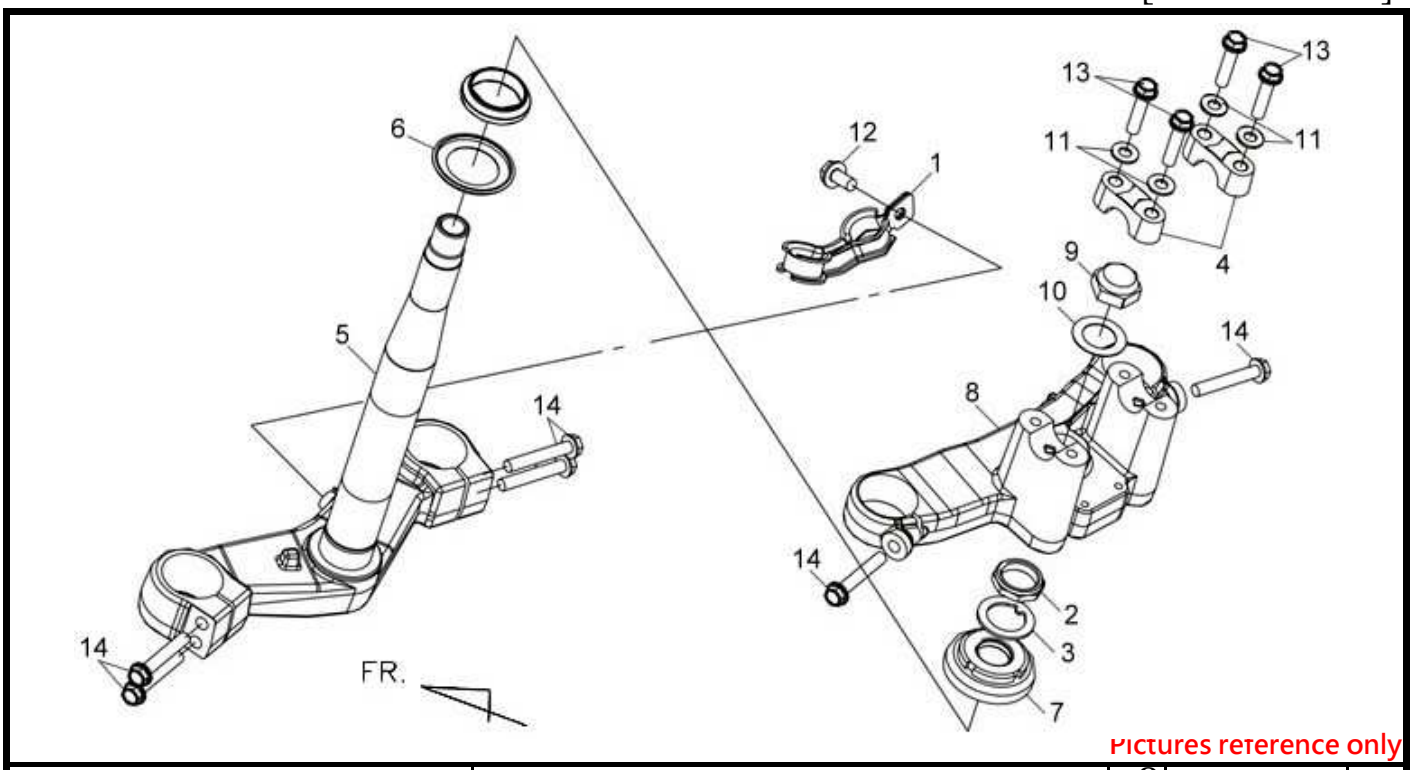

Pictures reference only

	PARTS NUMBER	DESCRIPTION	QTY	EFFECTIVE DATE	
1	45145-L4A-000	SUPPORTO TUBO OLIO FRENO ANT.	1		
2	50306-M9Q-000	DADO CANNOTTO	1		
3	50308-HMA-000	STRG STEM WASHER	1		
4	53131-RCA-010	HANDLE PIPE UP. HOLDER	2		
5	53200-L4A-000	PIASTRA FORCELLA INFERIORE	1		
6	53214-L4A-000	PARAPOLVERE	1		
7	53220-HMA-000	GHIERA CANNOTTO STERZO	1		
8	53231-L4A-000	FORK TOP BRIDGE	1		
9	90304-L4A-000	STEERING STEM NUT	1		
10	90503-B06-000	RONDELLA	1		
11	94101-08800	RONDELLA 8MM	4		
12	95801-06012-08	FLANGE BOLT	1		
13	95801-08035-07	FLANGE BOLT M8X35	4		
14	95801-08045-08	FLANGE BOLT 8X45	6		

※ Please check the color & stripe information according to the color index !

※N/A = SUBSTITUTE ※Y = EXCHANGEABLE ※N =NOT EXCHANGEABLE

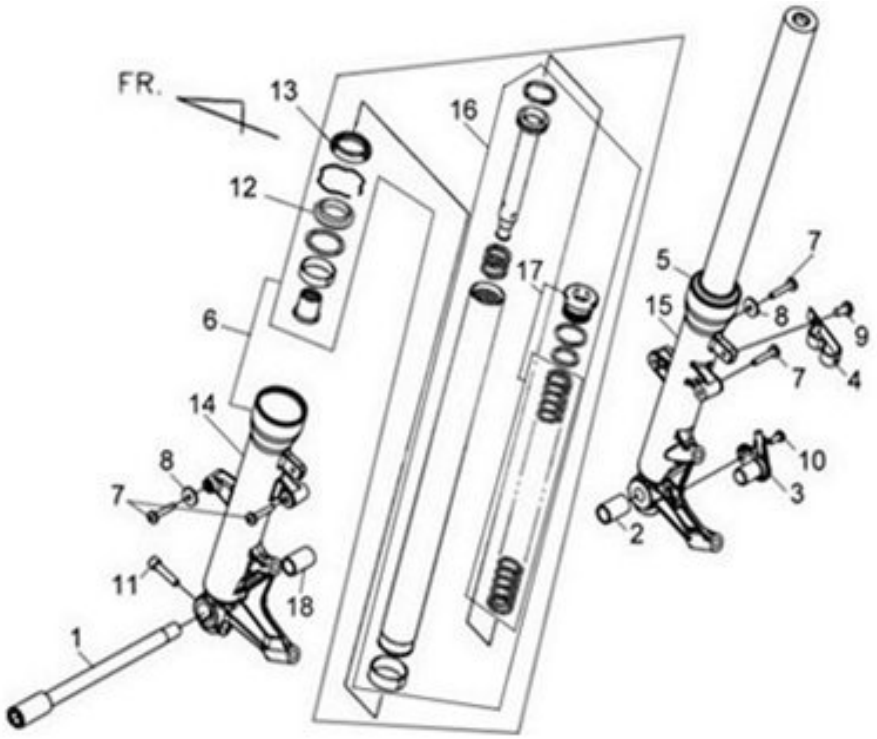

Pictures reference only

	PARTS NUMBER	DESCRIPTION	QTY	EFFECTIVE DATE	
1	44301-L4A-000	PERNO RUOTA ANTERIORE	1		
2	44312-L4A-000	DISTANZIALE	1		
3	44800-L4A-000	RINVIO TACHIMETRO	1		
4	45156-L4A-000	PASSACAVO	1		
5	51400-L4A-000-KB	GAMBA FORCELLA DX COMPLETA	1		
6	51500-L4A-000-KB	GAMBA FORCELLA SX COMPLETA	1		
7	90114-A5L-000	SPECIAL SCREW 6X35	4		
8	94103-06700	PLAIN WASHER 6MM	2		
9	95801-06012-08	FLANGE BOLT	1		
10	96001-06012-00	VITE FLANGIATA 6X12	1		
11	96700-08035-00	VITE BRUGOLA 8X35	1		
12	91255-L4A-000	PARAOLIO	1		
13	91256-L4A-000	PARAPOLVERE	1		
14	FE881-283-03	BOTTOM CASE LH .	1		
15	FE881-284-03	BOTTOM CASE RH .	1		
16	FE881-303-00	FR.FORK PIPE .	1		
17	FF501-380-00	SPRING SET	1		
18	44313-L4A-000	LH.FR.WHEEL COLLAR	1		

※N/A = SUBSTITUTE ※Y = EXCHANGEABLE ※N =NOT EXCHANGEABLE

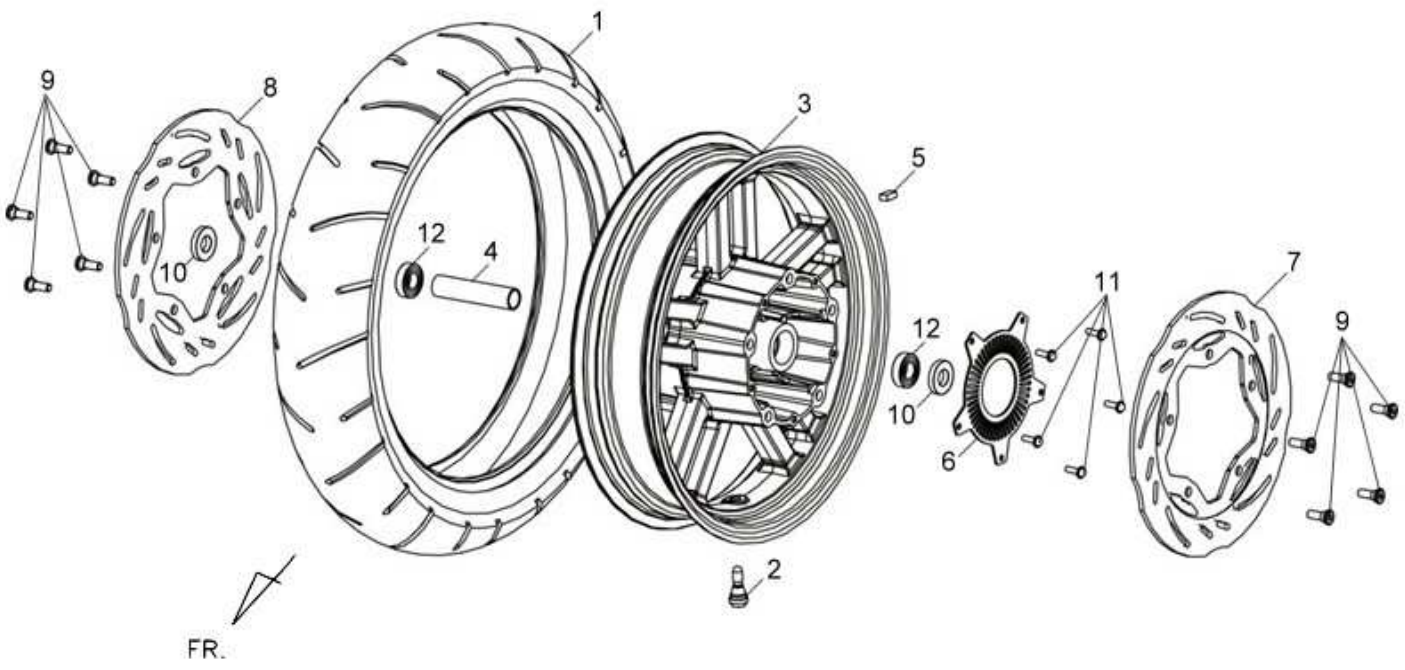

Pictures reference only

	PARTS NUMBER	DESCRIPTION	QTY	EFFECTIVE DATE	
1	1T011207015-6135	PNEUMATICO 120/70-15 (56S)	1		
2	42753-KJ9-000	VALVOLA PNEUMATICO TUBELESS	1		
3	44601-L4A-000-KB	CERCHIO RUOTA ANTER.NERO	1		
4	44620-L4A-000	DISTANZIALE	1		
5	44720-H9A-000	BALANCE WEIGHT	1		
6	45120-L4A-000	FLANGIA ABS	1		
7	45121-L4A-000-KB	DISCO FRENO ANT.DX	1		
8	45122-L4A-000-KB	DISCO FRENO ANT.SX	1		
9	90105-KR3-000	VITE BRUGOLA 8X24 DISCO FRENO	10		
10	91211-RCA-000	PARAOLIO 22X35X7	2		
11	93500-05012-0A	PAN SCREW 5*12mm	5		
12	96150-60033-10	CUSCINETTO A SFERE 6003UU	2		

※ Please check the color & stripe information according to the color index !

※N/A = SUBSTITUTE ※Y = EXCHANGEABLE ※N =NOT EXCHANGEABLE

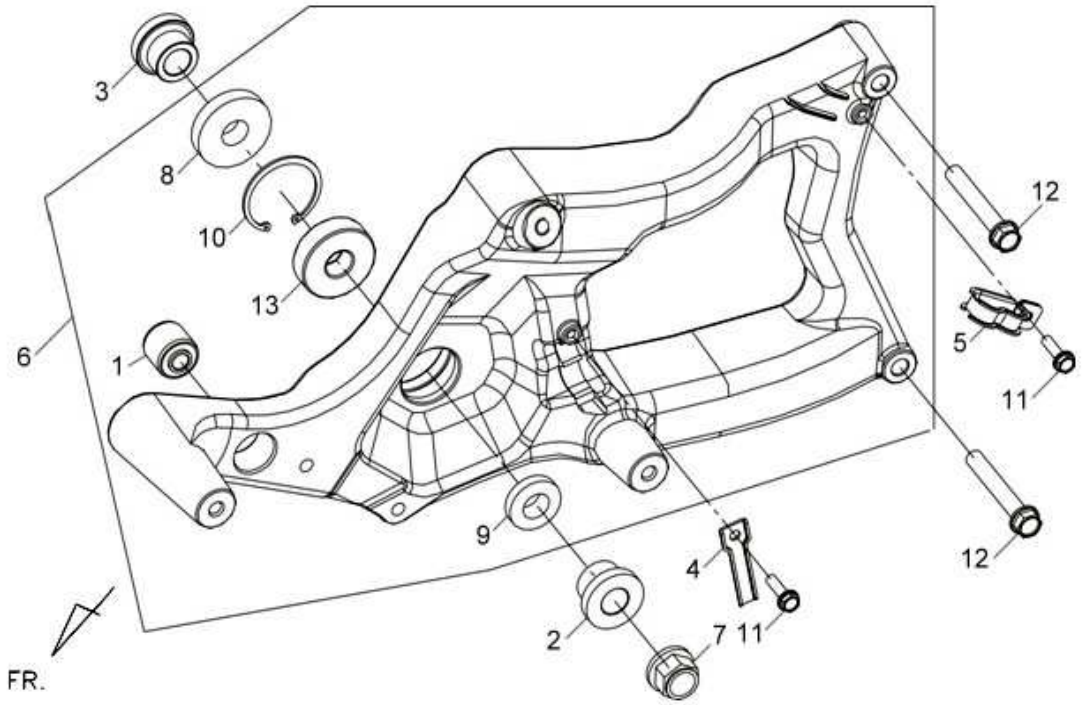

Pictures reference only

	PARTS NUMBER	DESCRIPTION	QTY	EFFECTIVE DATE	
1	11203-L4A-000	SILENT BLOCK	1		
2	42311-H9A-000	DISTANZIALE	1		
3	42311-L4A-000	DISTANZIALE	1		
4	43146-L4A-000	PASSACAVO	1		
5	45125-L4A-000	PASSACAVO	1		
6	5210A-L4A-000	BRACCIO OSCILLANTE POST.COMPL.	1		
7	90305-M9Q-900	DADO 16MM	1		
8	90754-H9A-000	PARAPOLVERE 26X47X7	1		
9	90755-H3C-000	PARAPOLVERE 26X35X7	1		
10	94524-47000	CIR CLIP IN47	1		
11	95801-06012-07	VITE FLANGIATA 6X12	2		
12	95801-10075-07	FLANGE BOLT	2		
13	96150-63033-10	CUSCINETTO A SFERE 6303U	1		

※ Please check the color & stripe information according to the color index !

※N/A = SUBSTITUTE ※Y = EXCHANGEABLE ※N =NOT EXCHANGEABLE

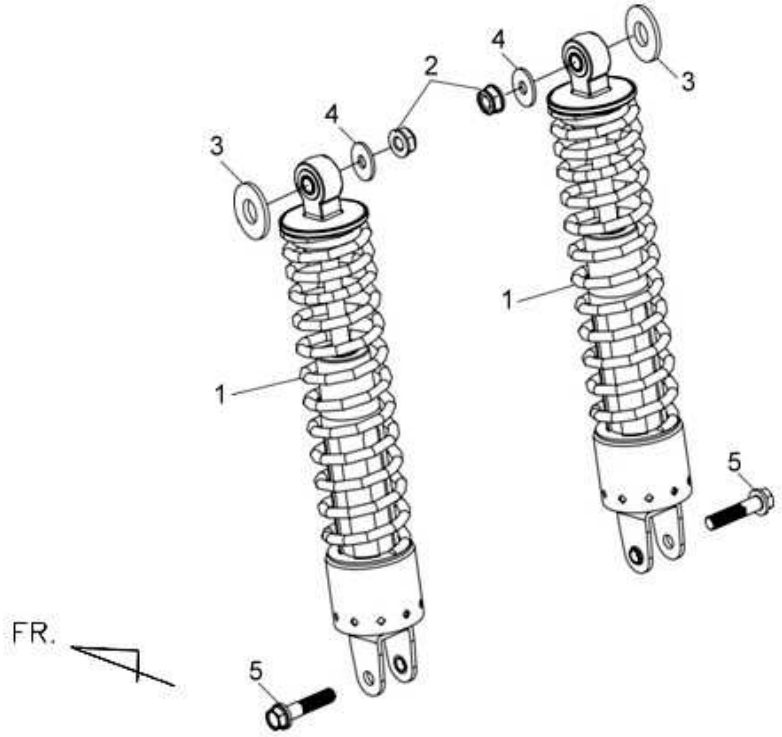

Pictures reference only

	PARTS NUMBER	DESCRIPTION	QTY	EFFECTIVE DATE	
1	52400-L4A-000-KB	AMMORTIZZATORE POST.	2		
2	90304-M9Q-000	DADO AUTOBLOCCANTE 10MM	2		
3	94101-12800	WASHER PLAIN 12MM	2		
4	94103-10000	RONDELLA	2		
5	95801-10045-07	BOLT FLANGE 10X45	2		

※ Please check the color & stripe information according to the color index !

※N/A = SUBSTITUTE ※Y = EXCHANGEABLE ※N =NOT EXCHANGEABLE

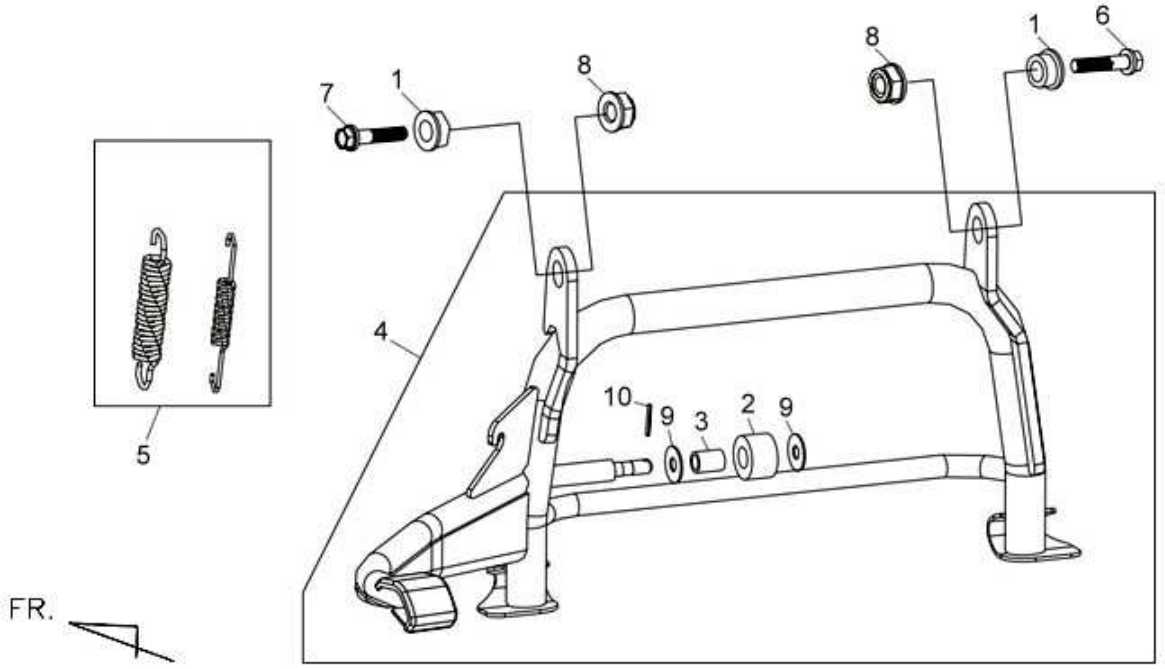

Pictures reference only

	PARTS NUMBER	DESCRIPTION	QTY	EFFECTIVE DATE	
1	50502-GY6-900	BOCCOLA CAVALLETTO CENTR.	2		
2	50505-H3A-000	TAMPONE CAVALLETTO	1		
3	50506-H3A-000	STOP RUBBER COLLAR	1		
4	5050A-L4A-000	CAVALLETTO CENTRALE	1		
5	5052A-H9A-000	MOLLA CAVALLETTO CENTRALE	1		
6	90116-HHA-000	PERNO CAVALLETTO CENTRALE	2		
7	90117-L4A-000	VITE FLANGIATA 10X40	2		
8	90304-M9Q-000	DADO AUTOBLOCCANTE 10MM	2		
9	94102-08800	RONDELLA PIANA 8mm	2		
10	94201-25200	PIN SPLIT 2.5X20	1		

※ Please check the color & stripe information according to the color index !

※N/A = SUBSTITUTE ※Y = EXCHANGEABLE ※N =NOT EXCHANGEABLE

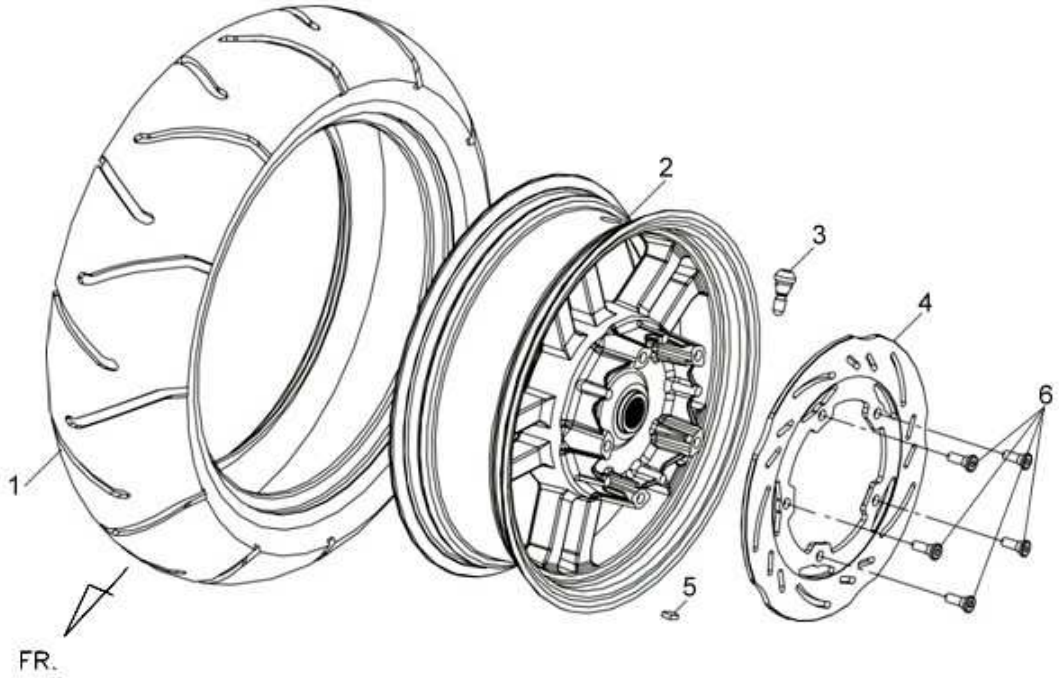

Pictures reference only

	PARTS NUMBER	DESCRIPTION	QTY	EFFECTIVE DATE	
1	1T011606014-6135	PNEUMATICO 160/60-14	1		
2	42601-L4A-000-KB	CERCHIO RUOTA POST.	1		
3	42753-KJ9-000	VALVOLA PNEUMATICO TUBELESS	1		
4	43121-L4A-000-KB	DISCO FRENO POST.	1		
5	44720-H9A-000	BALANCE WEIGHT	1		
6	90105-KR3-000	VITE BRUGOLA 8X24 DISCO FRENO	5		

※ Please check the color & stripe information according to the color index !

※N/A = SUBSTITUTE ※Y = EXCHANGEABLE ※N =NOT EXCHANGEABLE

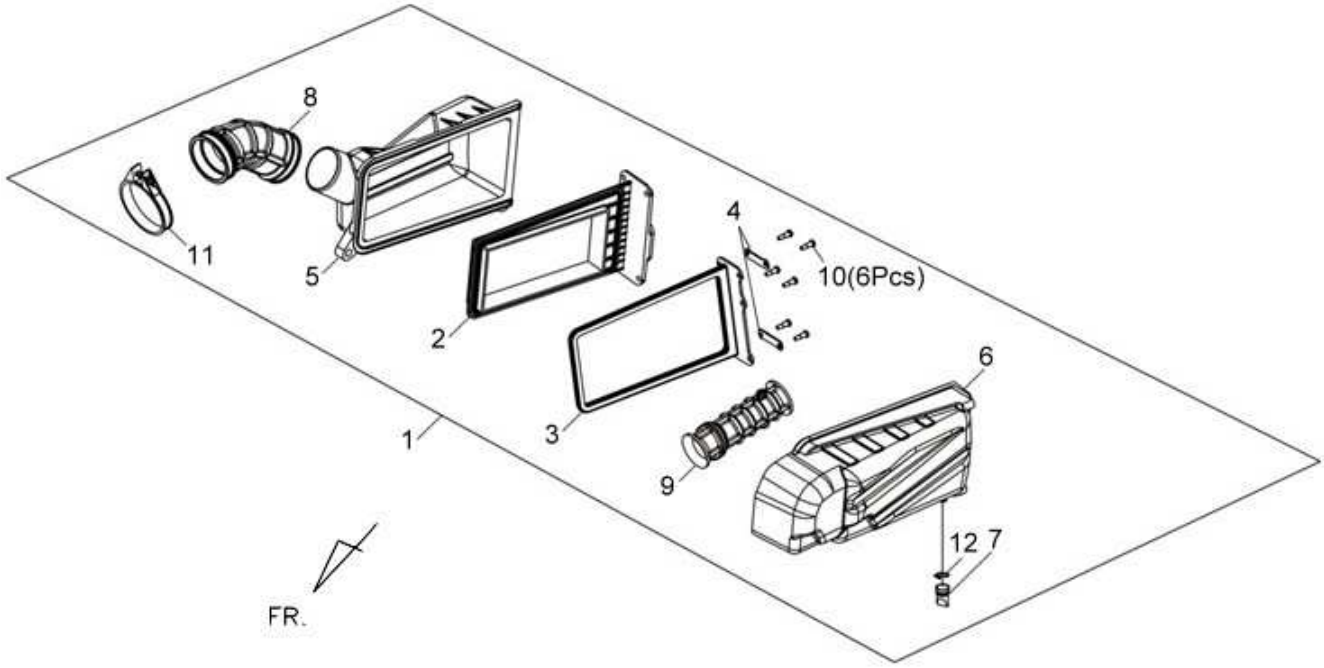

Pictures reference only

	PARTS NUMBER	DESCRIPTION	QTY	EFFECTIVE DATE	
1	17200-L4A-000	SCATOLA FILTRO ARIA COMPLETA	1		
2	17211-L4A-000	FILTRO ARIA	1		
3	17215-L4A-000	AIR/C ELEMENT RUBBER	1		
4	17219-L4A-000	ELEMENT SETTING PLATE	2		
5	17230-L4A-000	BASE SCATOLA FILTRO ARIA	1		
6	17231-L4A-000	COPERCHIO SCATOLA FILTRO ARIA	1		
7	17234-M51-000	AIR CLEANER DRAIN TUBE	1		
8	17253-L4A-000	AIR/C CONN.TUBE A	1		
9	17255-L4A-000	AIR/C.INLET DUCT	1		
10	90001-L4A-000	SPECIAL BOLT 5*19	6		
11	90652-REA-000	A/C CONNECTING TUBE BAND 62	1		
12	95002-80000	TUBE CLIP C12	1		

※ Please check the color & stripe information according to the color index !

※N/A = SUBSTITUTE ※Y = EXCHANGEABLE ※N =NOT EXCHANGEABLE

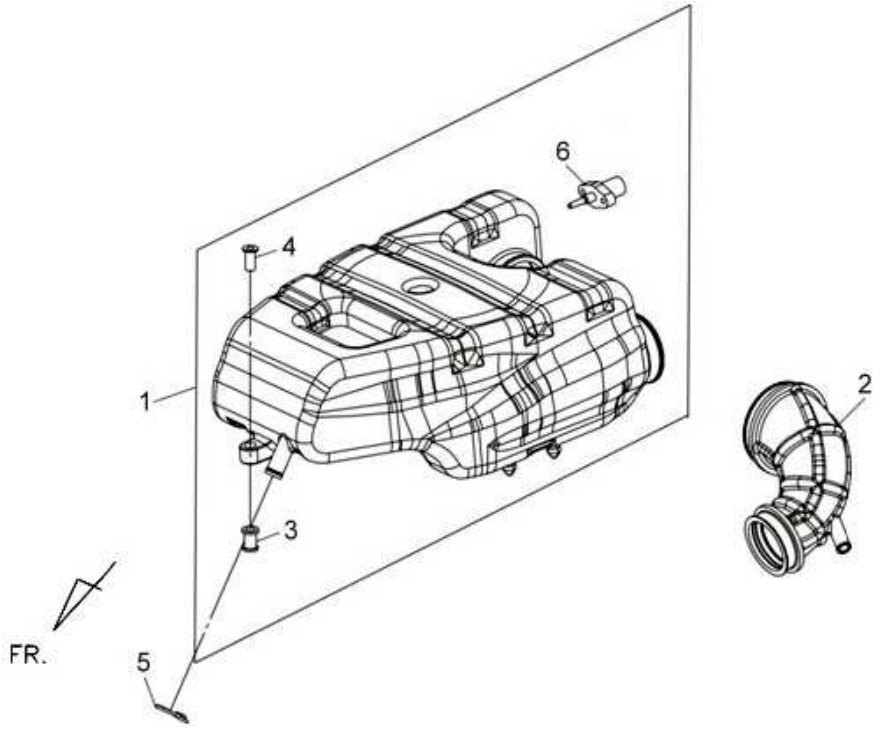

Pictures reference only

	PARTS NUMBER	DESCRIPTION	QTY	EFFECTIVE DATE	
1	1723A-L4A-000	AIR/C BOX ASSY	1		
2	17254-L4A-000	AIR/C CONNECTING TUBE B	1		
3	17258-L4A-000	AIR BOX RUBBER	1		
4	17257-L4A-000	AIR BOX COLLAR	1		
5	18533-M7Q-000	AIR HOSE CLIP 19	1		
6	37830-HMC-000	SENSORE TEMPERATURA ARIA	1		

※ Please check the color & stripe information according to the color index !

※N/A = SUBSTITUTE ※Y = EXCHANGEABLE ※N =NOT EXCHANGEABLE

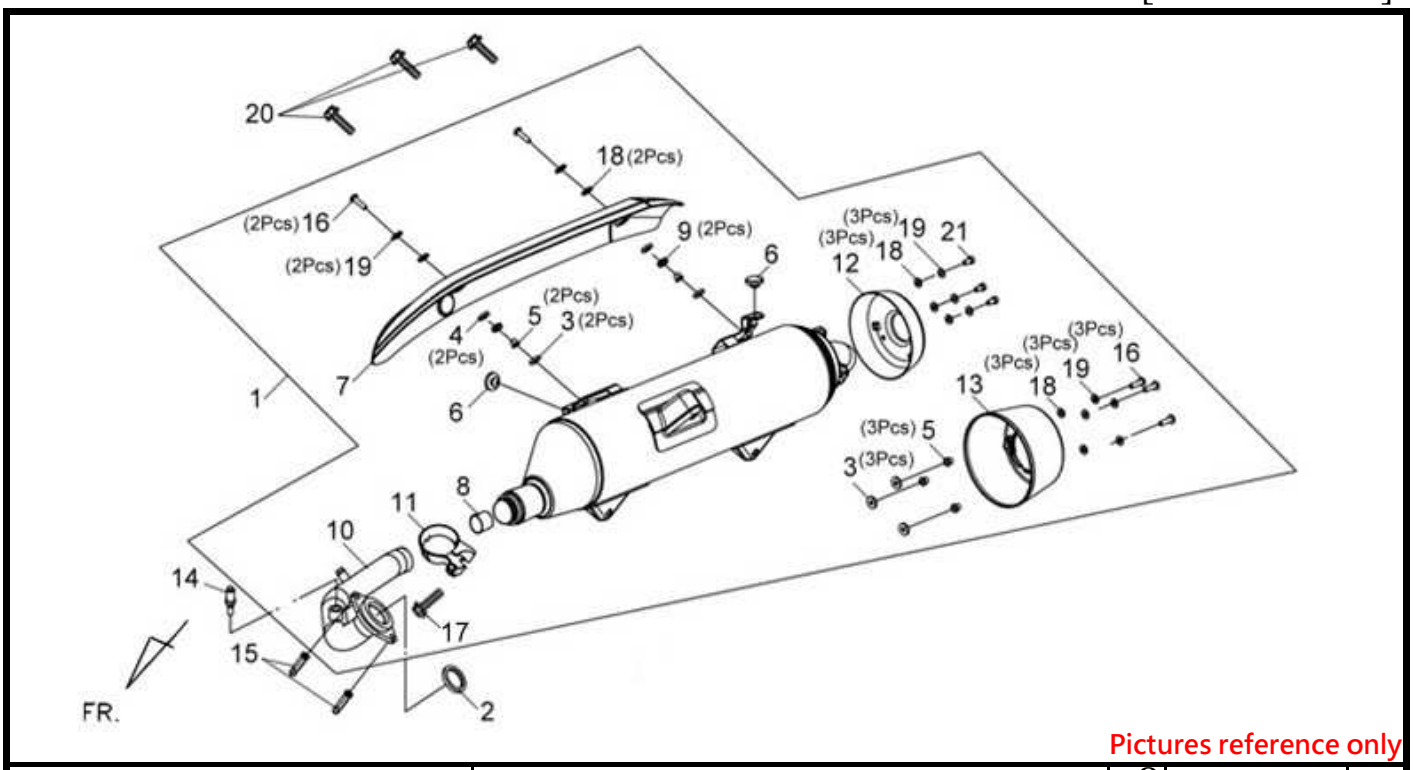

Pictures reference only

	PARTS NUMBER	DESCRIPTION	QTY	EFFECTIVE DATE	
1	18000-L4A-000	MARMITTA	1		
2	18291-REA-000	GUARNIZIONE SCARICO	1		
3	18292-F3E-000	RONDELLA ISOLANTE	5		
4	18293-F3E-000	RONDELLA ISOLANTE	2		
5	18295-F3E-000	BOCCOLA 6MM	5		
6	18316-L4A-000	MUFF.PROTECTOR STAY A RUBBER	2		
7	18318-L4A-000	PROTEZIONE MARMITTA	1		
8	18319-REA-300	MUFFLER GASKET	1		
9	18320-F3E-000	GOMMINO	2		
10	18320-L4A-300	COLLETTORE SCARICO MARMITTA	1		
11	18321-REA-000	MUFFLER BAND	1		
12	18324-L4A-000	OUTER TAIL CAP COMP	1		
13	18328-L4A-000	FONDELLO MARMITTA	1		
14	37890-A5L-000	O2 SENSOR	1		
15	90043-HMA-000	CAP NUT	2		
16	90116-L4A-000	SPECIAL BOLT M6*22	5		
17	93401-06010-07	WASHER BOLT 6*10	1		
18	94101-06700	PLAIN WASHER 6MM	8		
19	94111-06700	SPRING WASHER 6MM	8		
20	95801-08065-07	FLANGE BOLT 8X65	3		
21	96700-06012-08	VITE BRUGOLA 6X12	3		

※ Please check the color & stripe information according to the color index !

※N/A = SUBSTITUTE ※Y = EXCHANGEABLE ※N =NOT EXCHANGEABLE

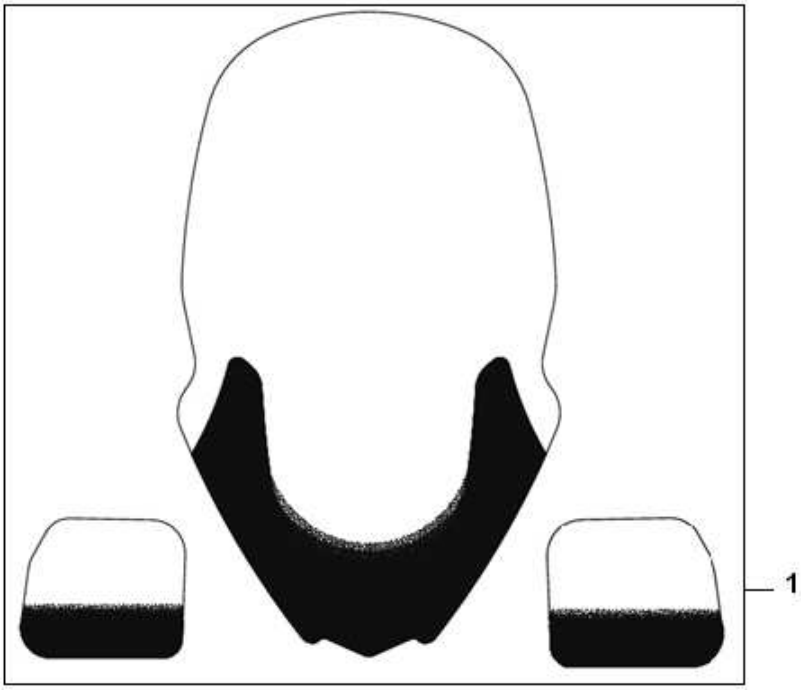

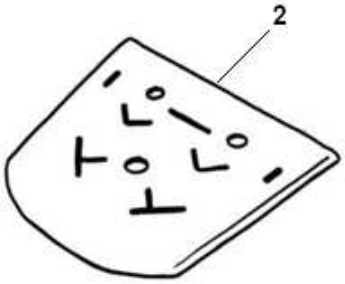

Pictures reference only

	PARTS NUMBER	DESCRIPTION	QTY	EFFECTIVE DATE	
1	53270LX40	PARABREZZA COMPLETO+KIT PARAMANI			
2	81300LX40	PORTABAULETTO COMPLETO			